A reduced polytopic LPV synthesis for a sampling varying controller : experimentation with a T inverted pendulum

ECC'07@Kos – $\mathcal{S}afe\mathcal{NECS}$ invited session

David Robert, Olivier Sename and Daniel Simon

Daniel.Simon@inrialpes.fr

$NeCS$ team

INRIA Rhône-Alpes and GIPSA-Lab

Summary

- Context and objectives
- Design of variable sampling controllers
  - LPV polytopic model
  - period dependent performance specification
  - H_∞ robust control
- Experimental assessment
  - T inverted pendulum
  - Control design
  - Simulations
  - Experiments
- Conclusion and future directions

Context and objectives

Context : Networked control nodes

- Digital control of a continuous system
- Shared execution resource (computer and/or field-bus)
- Varying available resources (energy aware nodes)

Traditional implementation :

- separation of concerns control/real-time
- based on worst cases
- not control aware

$\Rightarrow$ neither efficient nor flexible

Context and objectives

Context : Networked control nodes

- Digital control of a continuous system
- Shared execution resource (computer and/or field-bus)
- Varying available resources (energy aware nodes)

on-line adaptive scheduling parameters
w.r.t. availability of execution resources

Context and objectives

Context : Networked control nodes

- Digital control of a continuous system
- Shared execution resource (computer and/or field-bus)
- Varying available resources (energy aware nodes)

on-line adaptive scheduling parameters
w.r.t. availability of execution resources

CPU load = $\frac{c}{h}$ with c :execution time, h :period

Bandwidth = $\frac{d}{h}$ d :message size

Computer load aware control

Method : Design of a controller

- Which period may vary in $[h_{min}, ..., h_{max}]$
- Preserving of the stability during timing change
- Meeting a specified performance

Computer load aware control

Method : Design of a controller

- Which period may vary in $[h_{min}, ..., h_{max}]$
- Preserving of the stability during timing change
- Meeting a specified performance

Possible solutions :

Bank of n correctors for n periods :

- Tedious when n large
- *a posteriori* study of the transitions between controllers
- Cost of the implementation

Computer load aware control

Method : Design of a controller

- Which period may vary in $[h_{min}, ..., h_{max}]$
- Preserving of the stability during timing change
- Meeting a specified performance

Paper objective :

Synthesis of a variable sampling rate controller using a Linear Parameters Varying (LPV) method.

Recall : LPV design methods

LPV system : discrete time system with $\theta_k \in \Theta \subset \mathbb{R}^n$ vector of varying parameters :

$$\begin{cases} x_{k+1} = A(\theta_k)x_k + B(\theta_k)u_k \\ y_k = C(\theta_k)x_k + D(\theta_k)u_k \end{cases}$$

Recall : LPV design methods

LPV system : discrete time system with $\theta_k \in \Theta \subset \mathbb{R}^n$ vector of varying parameters :

$$\begin{cases} x_{k+1} = A(\theta_k)x_k + B(\theta_k)u_k \\ y_k = C(\theta_k)x_k + D(\theta_k)u_k \end{cases}$$

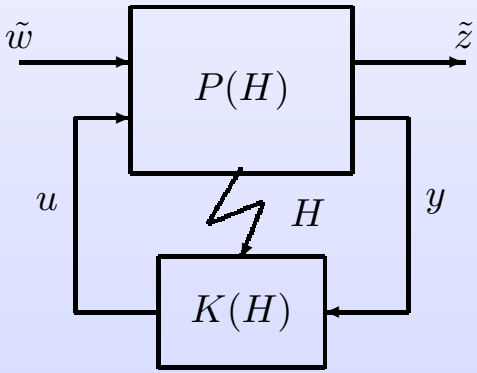

LPV method : synthesis of a controller parametrised by θ_k

[Apkarian et Gahinet (1995)]

- Consider the period h as the varying parameter ;
- Continuous linear system $\Rightarrow$ discrete time LPV model ;
- Synthesis of a h-dependent controller.

Parametrised discretization

Continuous time system :

$$\left\{ \begin{array}{lcl} \dot{x} & = & Ax + Bu \\ y & = & Cx + Du \end{array} \right.$$

Discrete time system :

$$\left\{ \begin{array}{lcl} x_{k+1} & = & A_d(h)\, x_k + B_d(h)\, u_k \\ y_k & = & C_d\, x_k + D_d\, u_k \end{array} \right.$$

Parametrised discretization

Continuous time system :

$$\begin{cases} \dot{x} &= Ax + Bu \\ y &= Cx + Du \end{cases}$$

Discrete time system :

$$\begin{cases} x_{k+1} &= A_d(h)\, x_k + B_d(h)\, u_k \\ y_k &= C_d\, x_k + D_d\, u_k \end{cases}$$

with

$$A_d(h) = A_{h_0} A_{\delta_h} \qquad h = h_0 + \delta_h$$

$$B_d(h) = B_{h_0} + A_{h_0} B_{\delta_h} \qquad A_{\delta_h} = e^{A\delta_h}$$

Methodology : Develop $A_d(h)$ and $B_d(h)$ in a polytopic way.

Recall : Polytopic model

Discrete time LPV polytopic model :

$$\begin{cases} x_{k+1} = A(\theta_k)x_k + B(\theta_k)u_k \\ y_k = C(\theta_k)x_k + D(\theta_k)u_k \end{cases}$$

with :

- $A(\theta_k)$, $B(\theta_k)$, $C(\theta_k)$, $D(\theta_k)$ affine en $\theta_k \in \Theta$
- Θ is a polytope with k vertices ω_i
- $\omega_i = \theta_k^{min}, \theta_k^{max}$
- $\theta_k = \sum_{i=1}^{k} \alpha_i(k)\omega_i$ with $\alpha_i(k) \geq 0,\ \sum_{i=1}^{k} \alpha_i(k) = 1$

$$\begin{pmatrix} A(\theta_k) & B(\theta_k) \\ C(\theta_k) & D(\theta_k) \end{pmatrix} = \sum_{i=1}^{k} \alpha_i(k) \begin{pmatrix} A_i & B_i \\ C_i & D_i \end{pmatrix}$$

Polytopic model : Taylor's expansion of exp(Ah)

Affine form via a Taylor's expansion :

Affine form in δ_h^i, $i = 1 \ldots N$:

$$A_d(h) = A_{h_0} A_{\delta_h} = A_{h_0} e^{A\delta_h} \approx A_{h_0}(\sum_{i=1}^{N} \frac{A^i}{i!} \delta_h^i)$$

$$B_d(h) = B_{h_0} + A_{h_0} B_{\delta_h} = B_{h_0} + A_{h_0}(\sum_{i=1}^{N} \frac{A^{i-1}B}{i!} \delta_h^i)$$

with $h = h_0 + \delta_h$

N parameters $\Rightarrow 2^N$ vertices !

Approximation error

Study of the order N for the series :

- Error criterion $J_M(h) = \|G_d(h,z) - \hat{G}_{d_N}(h,z)\|_\infty$
- Example on a stable 2nd order system

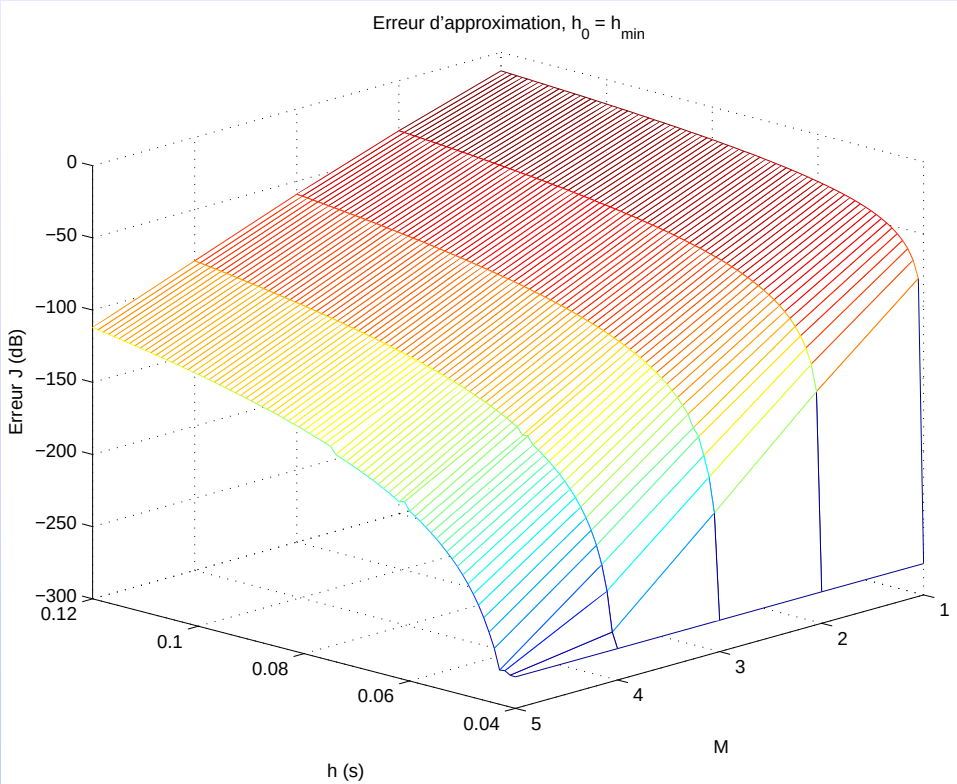

Polytope size reduction

Transform into a polytopic model with :

- $\theta_k = (\delta_h, \delta_h^2, \ldots, \delta_h^N)^T$
- State matrices affine in θ_k

Exploiting the parameters dependency to reduce the polytope :

Polytope size reduction

Transform into a polytopic model with :

- $\theta_k = (\delta_h, \delta_h^2, \ldots, \delta_h^N)^T$
- State matrices affine in θ_k

Exploiting the parameters dependency to reduce the polytope :

N=2

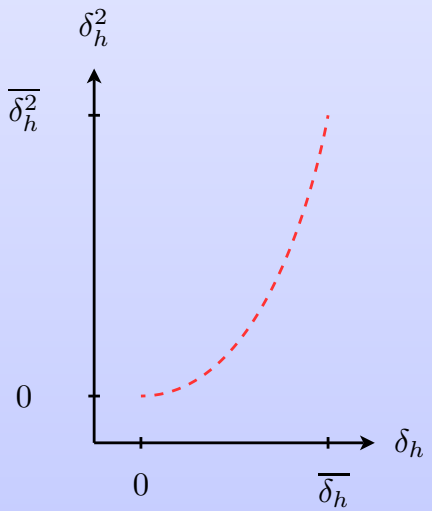

Polytope size reduction

Transform into a polytopic model with :

- $\theta_k = (\delta_h, \delta_h^2, \ldots, \delta_h^N)^T$
- State matrices affine in θ_k

Exploiting the parameters dependency to reduce the polytope :

N=2

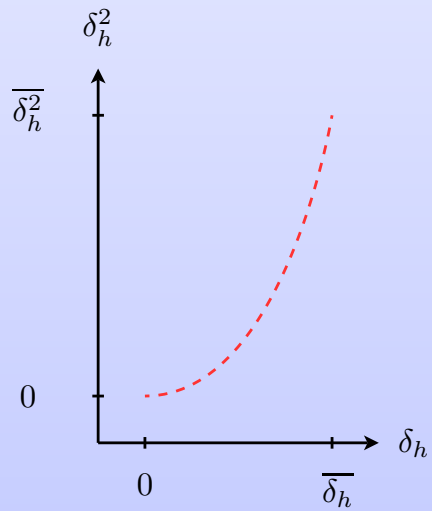

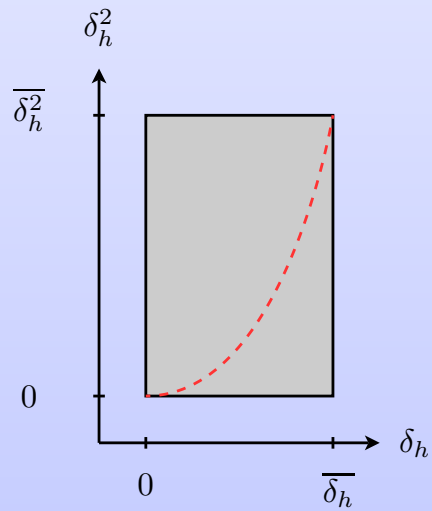

Polytope size reduction

Transform into a polytopic model with :

- $\theta_k = (\delta_h, \delta_h^2, \ldots, \delta_h^N)^T$
- State matrices affine in θ_k

Exploiting the parameters dependency to reduce the polytope :

N=2

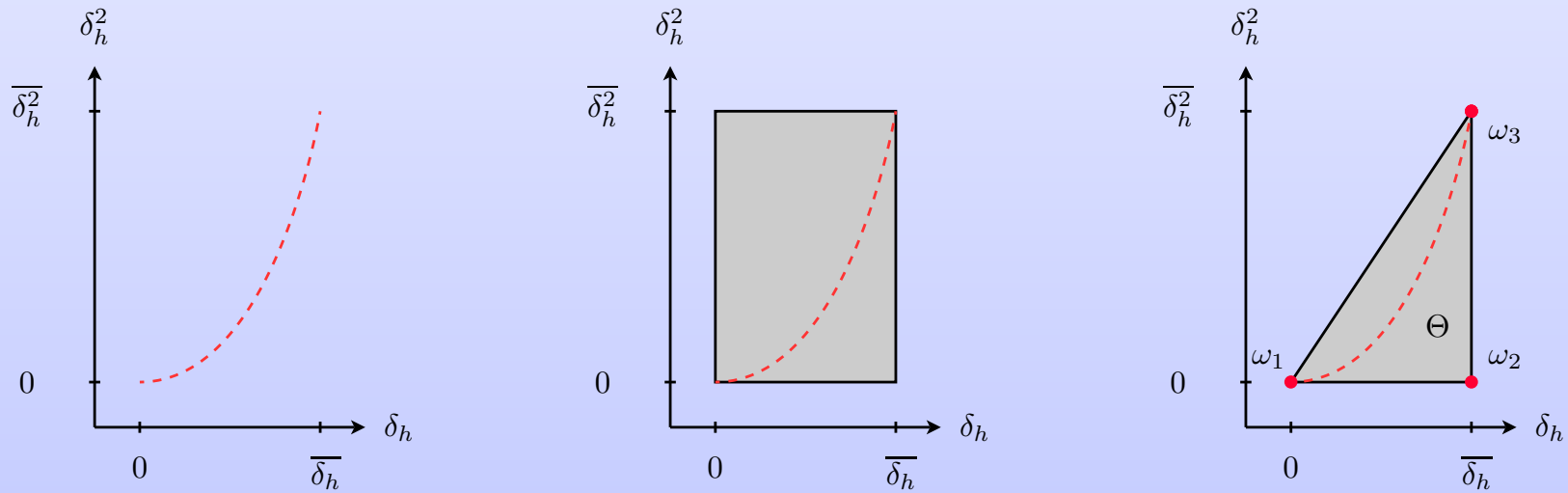

Polytope size reduction : general case

$$h = h_{min} + \delta, \quad 0 \leq \delta \leq \delta_{max}, \quad \delta_{max} = h_{max} - h_{min}$$

$$(0, 0, 0, \ldots, 0)$$

$$(\delta_{max}, 0, 0, \ldots, 0)$$

$$(\delta_{max}, \delta_{max}^2, 0, \ldots, 0)$$

$$\vdots$$

$$(\delta_{max}, \delta_{max}^2, \delta_{max}^3, \ldots, \delta_{max}^N)$$

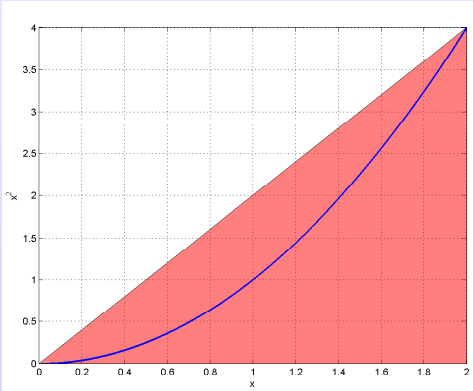

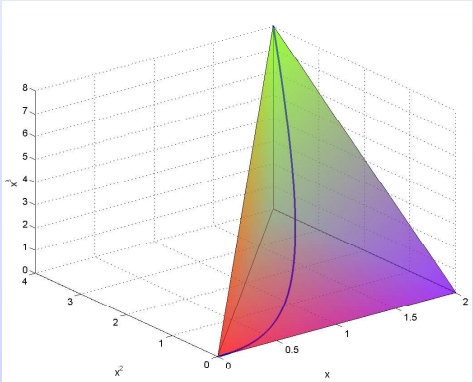

$N + 1$ vertices rather than 2^N !

k influences the conservatism and complexity

- of the synthesis (2k + 1) LMIs, k = $N + 1$ or 2^N
- of the real-time implementation : convex combination of k controllers

Recall : Polytopic LPV controller

Gahinet et al (1996), Oliveira et al (2002) :
Synthesis of a controller K which guarantees :

- Internal stability of the closed loop
- $\|z\|_2 < \gamma \|w\|_2$

for all trajectory h in H

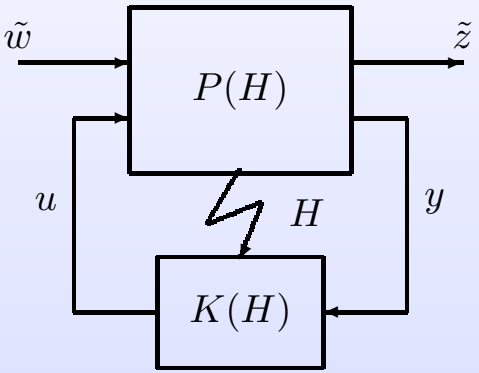

Polytopic controller :

$$K(H) : \begin{cases} \tilde{x}_{k+1} = A_K(H)\tilde{x}_k + B_K(H)y_k \\ u_k = C_K(H)\tilde{x}_k + D_K(H)y_k \end{cases}$$

with :

$$\begin{pmatrix} A_K(H) & B_K(H) \\ C_K(H) & D_K(H) \end{pmatrix} = \sum_{i=1}^{N} \alpha_i(k) \begin{pmatrix} A_{K_i} & B_{K_i} \\ C_{K_i} & D_{K_i} \end{pmatrix}$$

Performance specification

- H_∞ framework
- find a controller K such internal stability is achieved
- $\|\tilde{z}\|_2 < \gamma \|\tilde{w}\|_2$, where γ is the H_∞ attenuation level

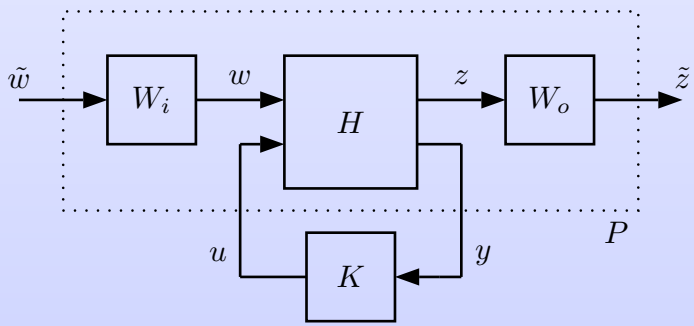

Performance specification

- H_∞ framework
- find a controller K such internal stability is achieved
- $\|\tilde{z}\|_2 < \gamma \|\tilde{w}\|_2$, where γ is the H_∞ attenuation level

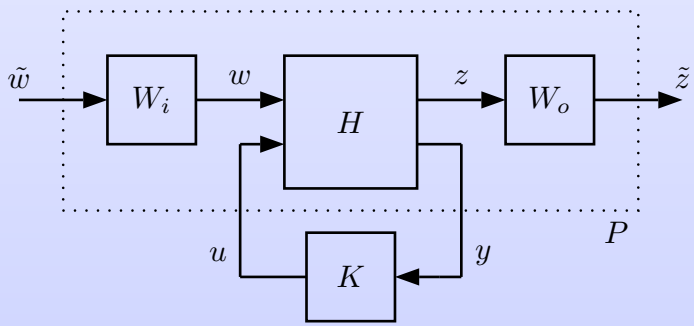

- closed-loop performance strongly depends on the sampling period $\rightarrow$ make the performance specification vary with the period
- weighting functions are sampling rate dependent $W_i(h)$, $W_o(h)$
- smaller the period, faster the system : $\omega_S = \alpha/h$

Discrete LPV synthesis

- Solving (2k + 1) LMI to synthesise k fixed gains controllers vertex controllers (off-line)
- On-line convex combination of the vertex controllers giving :

$$K(h) = K(\alpha_1, \ldots \alpha_k) = \sum_{j=1}^{k} \alpha_j K_j$$

  - $\alpha_i(h)$ polytopic coordinates (explicit recursive solution for the reduced polytope)
  - sizeof $K(h)$ = sizeof K_j

Experiment

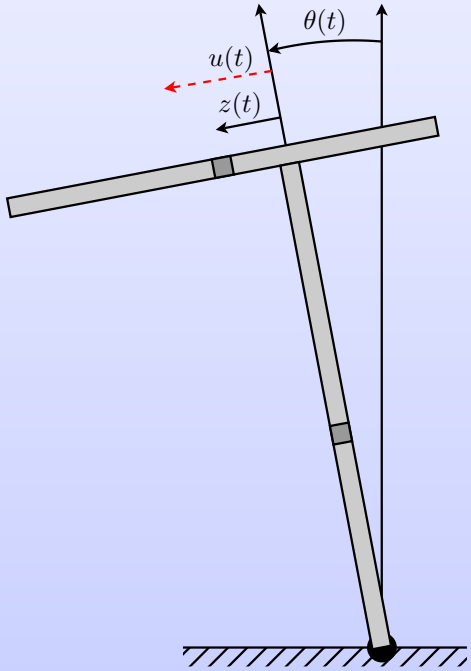

open-loop unstable, non-minimum phase, under-actuated

$\Rightarrow$ difficult to control

Modelling

$$\begin{pmatrix} m_1 & m_1 l_0 \\ m_1 l_0 & \bar{J} \end{pmatrix} \begin{pmatrix} \ddot{z} \\ \ddot{\theta} \end{pmatrix} + \begin{pmatrix} -f_{v_z} & -m_1 z\dot{\theta} \\ 2m_1 z\dot{\theta} & 0 \end{pmatrix} \begin{pmatrix} \dot{z} \\ \dot{\theta} \end{pmatrix}$$
$$+ \begin{pmatrix} -m_1 \sin\theta \\ -(m_1 l_0 + m_2 l_c)\sin\theta - m_1 z \cos\theta \end{pmatrix} g = \begin{pmatrix} u \\ 0 \end{pmatrix} \qquad (1)$$

Name	Value	Description
m_1	0.217 kg	horizontal sliding rod mass
m_2	1.795 kg	vertical rod mass
l_0	0.33	vertical rod length
l_c	-0.032 m	vertical rod position of the centre of gravity
g	9.81 m.s^{-2}	gravity acceleration
$\bar{J}$	0.061 Nm^2	Nominal inertia
f_{v_z}	0.1 kg.s^{-1}	viscous friction

Modelling

$$\begin{cases} \dot{x}_1 = x_2 \\ \dot{x}_2 = -l_0\dot{x}_4 + x_1x_4^2 + g\sin x_3 - \dfrac{f_{v_z}}{m_1}x_2 + \dfrac{u}{m_1} \\ \dot{x}_3 = x_4 \\ \dot{x}_4 = \dfrac{1}{J_0(x_1) - m_1l_0^2}\,(+g(m_1x_1\cos x_3 + m_2l_c\sin x_3) \\ \qquad -m_1(l_0x_4 + 2x_2)x_1x_4 - l_0u) \end{cases}$$

$$A = \begin{pmatrix} 0 & 1 & 0 & 0 \\ \frac{-l_0gm_1}{\bar{J}-m_1l_0^2} & -\frac{f_{v_z}}{m_1} & \frac{-l_0gm_2l_c}{\bar{J}-m_1l_0^2} + g & 0 \\ 0 & 0 & 0 & 1 \\ \frac{gm_1}{\bar{J}-m_1l_0} & 0 & \frac{gm_2l_c}{\bar{J}-m_1l_0^2} & 0 \end{pmatrix}, B = \begin{pmatrix} 0 \\ \frac{l_0^2}{\bar{J}-m_1l_0^2} + \frac{1}{m_1} \\ 0 \\ \frac{-l_0}{\bar{J}-m_1l_0^2} \end{pmatrix}$$

$$C = \begin{pmatrix} 1 & 0 & 0 & 0 \\ 0 & 0 & 1 & 0 \end{pmatrix}$$

Performance specification

General control configuration :

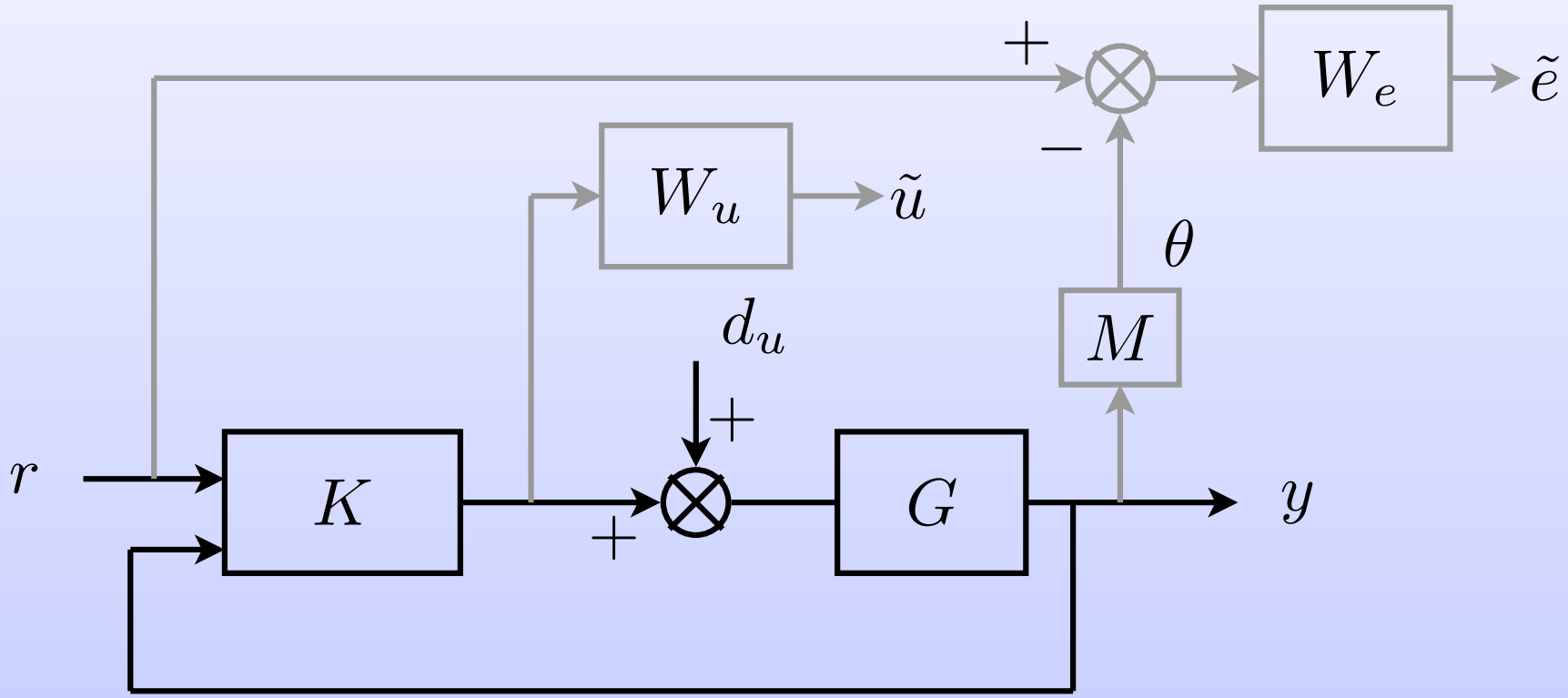

sampling period range : [1,3] msecs

Performance specification

control objectives :

$$W_e(p,f) = \frac{p\, M_S + \omega_S(f)}{p + \omega_S\, \epsilon_S} \qquad \omega_S(f) = h_{min}\, \omega_{S_{max}}\, f$$

$$W_u(p,f) = \frac{1}{M_U}$$

where $f = 1/h$, $\omega_{S_{max}}$ = 1.5 rad/s, M_S = 2, ϵ_S = 0.01 and M_U = 5.
discretization leads to constant weighting functions. . .

discrete time mixed sensitivity problem :

$$\left\| \begin{matrix} W_e(I - MS_yGK_1) & W_eMS_yG \\ W_uS_uK_1 & W_uT_u \end{matrix} \right\|_\infty \leq \gamma$$

Taylor expansion errors

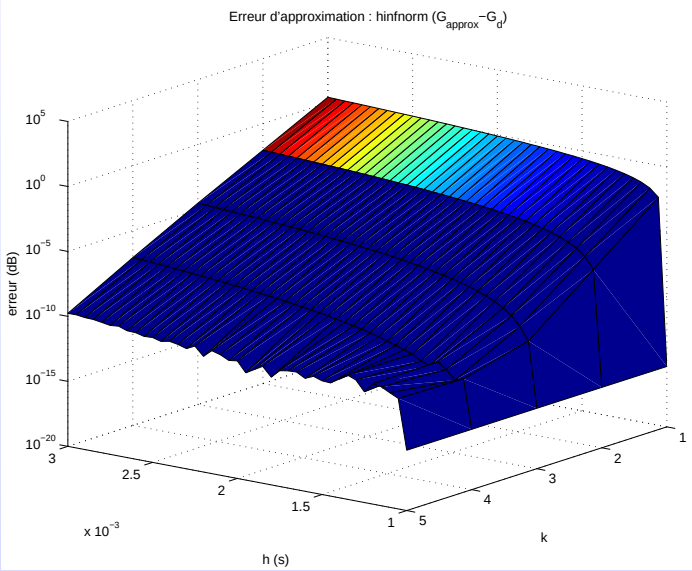

Approximation error estimate : $J_M(h) = \|G_d(z,h) - \tilde{G}_{d_M}(z,h)\|_\infty$

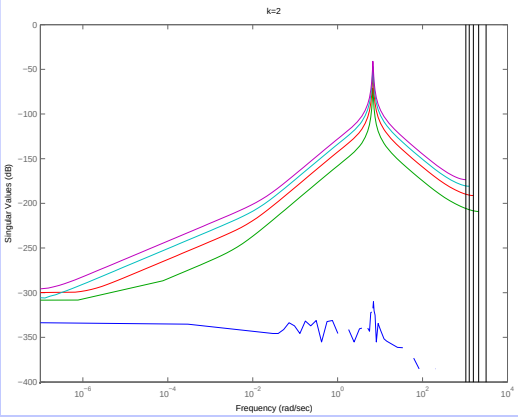

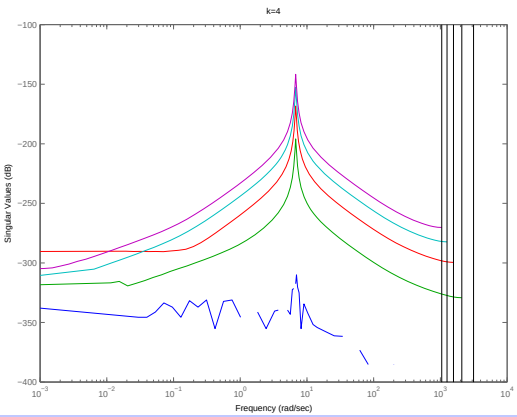

LPV/H_∞ design

	Polytope	Nb vertices	γ_{opt}
Taylor order N=2	full	4	1.1304
Taylor order N=2	reduced	3	1.1299
Taylor order N=4	full	16	1.1313
Taylor order N=4	reduced	5	1.1303

LPV/H_∞ design

Sensitivity functions (N=2, reduced polytope, 10 frozen values of h)

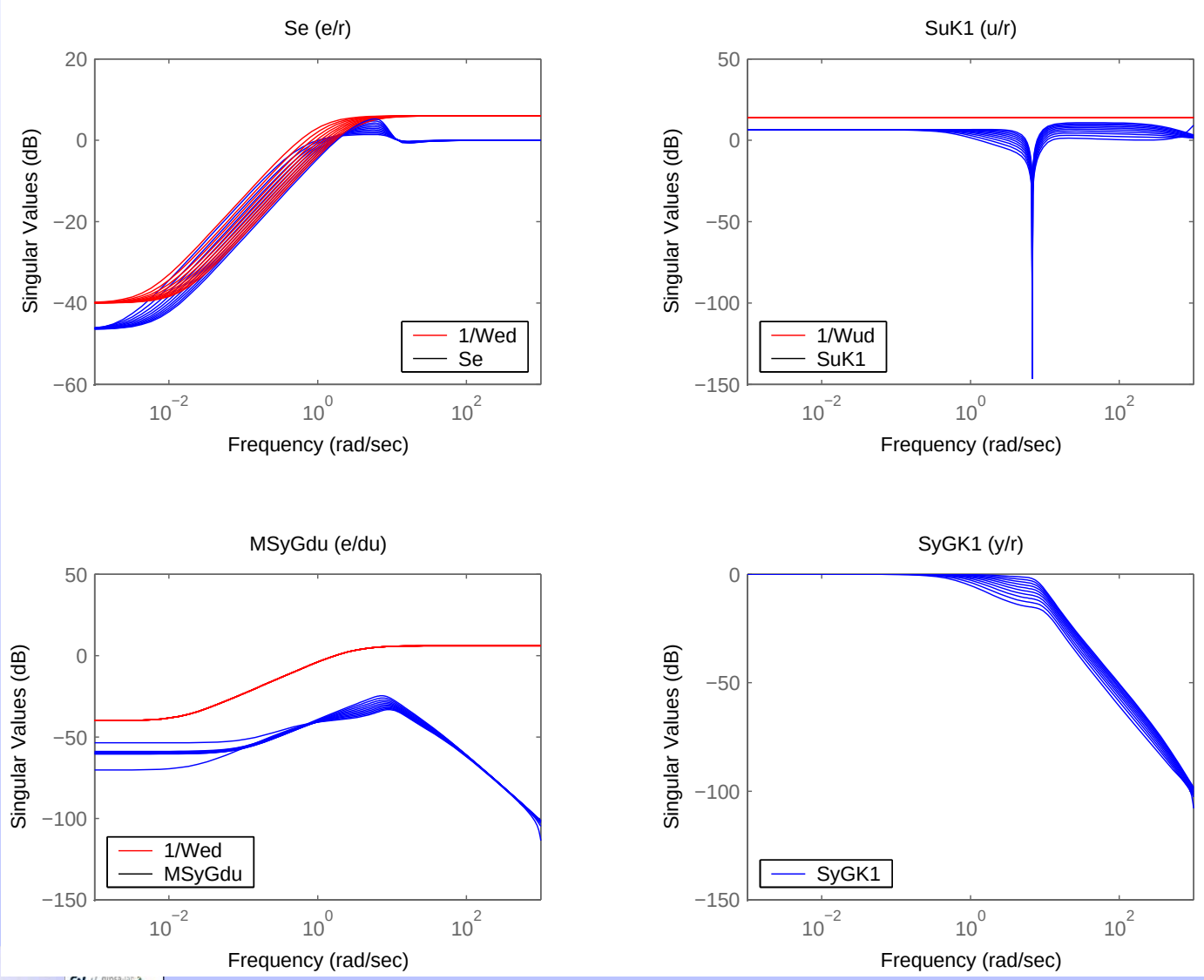

Response time of the non-linear process

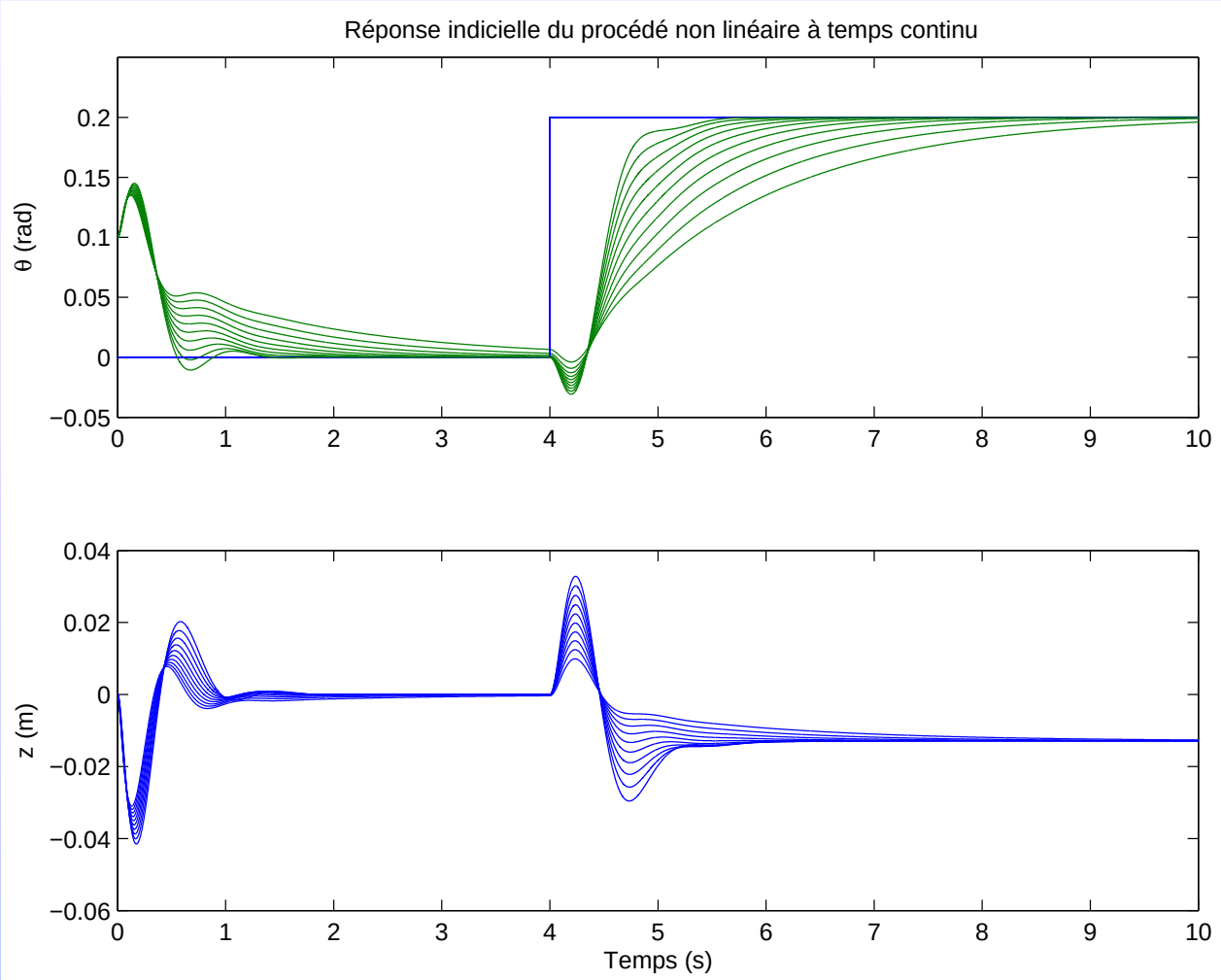

Simulation

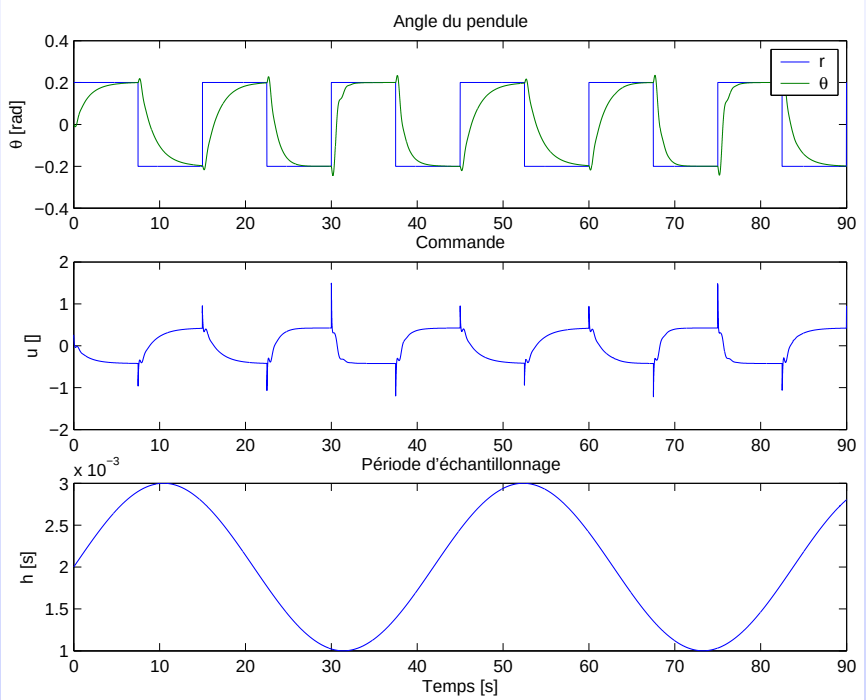
Angle du pendule
θ [rad]
r
θ
Commande
u []
Période d'échantillonnage
x 10^-3
h [s]
Temps [s]

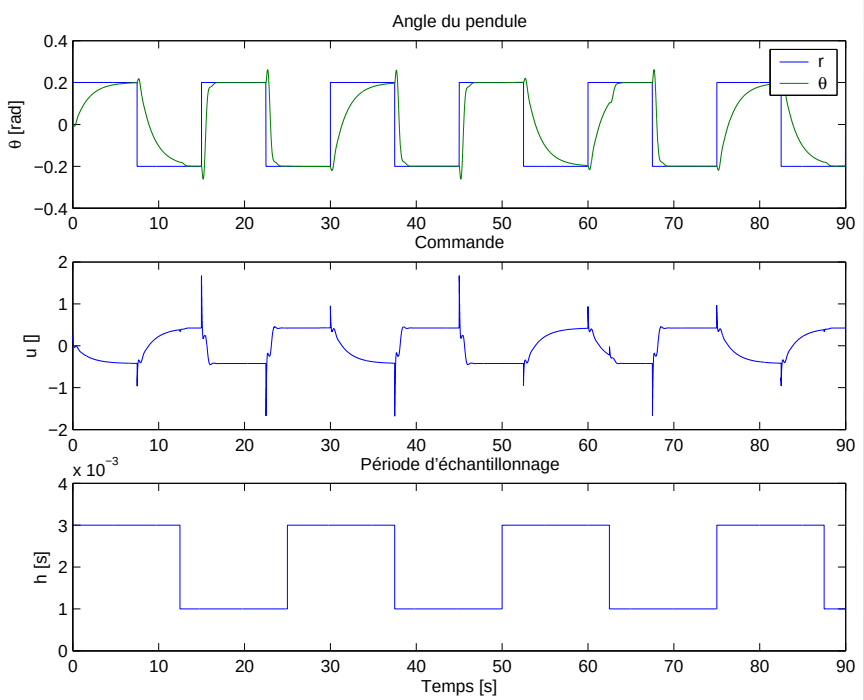
Angle du pendule
θ [rad]
r
θ
Commande
u []
Période d'échantillonnage
x 10^-3
h [s]
Temps [s]

Experiments

Matlab/Simulink using the Real-time Workshop and xPC Target

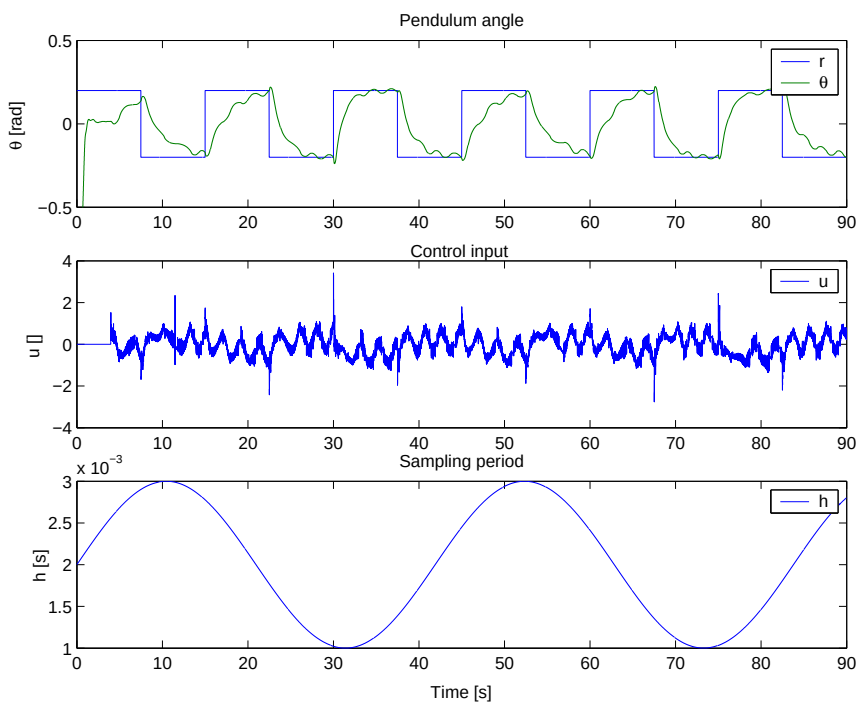

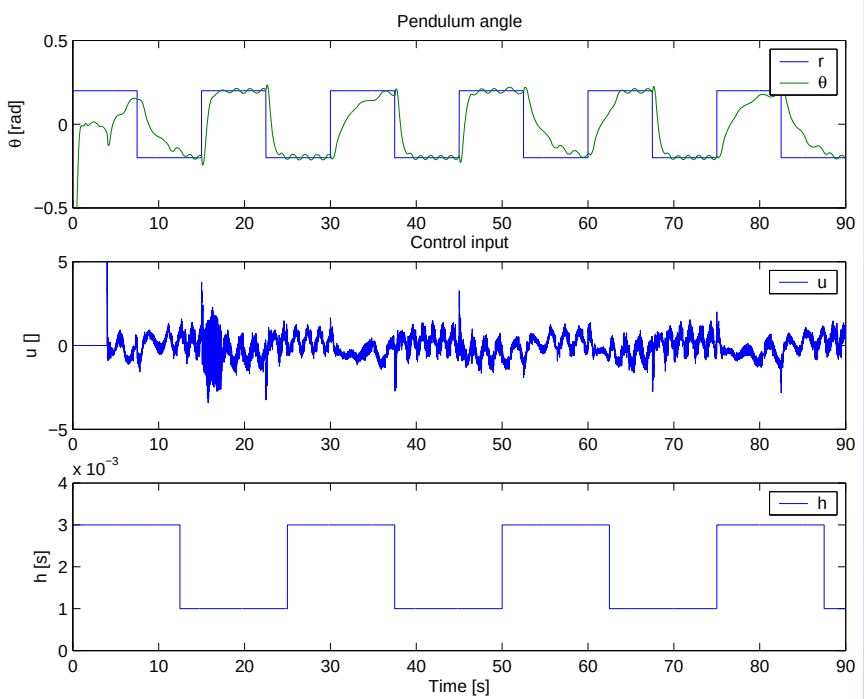

Summary and ongoing work

- Design of a sampling varying controller using the LPV framework
  - Efficient polytopic approach
  - Sampling rate dependent performance
- Advantages :
  - \+ Unique synthesis w.r.t. specified performance
  - \+ Stability is guaranteed for all period transitions
  - \+ Moderate complexity and experimental feasibility
- Further use in control/scheduling architectures
  - Compliant with simple feedback-schedulers
  - Ongoing investigate robustness w.r.t. timing uncertainties