ACTIVITY PRESERVING BIJECTIONS BETWEEN SPANNING TREES AND ORIENTATIONS IN GRAPHS

EMERIC GIOAN, MICHEL LAS VERGNAS(*)

ABSTRACT. The main results of the paper are two dual algorithms bijectively mapping the set of spanning trees with internal activity 1 and external activity 0 of an ordered graph onto the set of acyclic orientations with adjacent unique source and sink. More generally, these algorithms extend to an activity-preserving correspondence between spanning trees and orientations. For certain linear orderings of the edges, they also provide a bijection between spanning trees with external activity 0 and acyclic orientations with a given unique sink. This construction uses notably an active decomposition for orientations of a graph which extends the notion of components for acyclic orientations with unique given sink.

RÉSUMÉ. Les principaux résultats de ce papier sont deux algorithmes duaux qui définissent une bijection entre l'ensemble des arbres couvrants d'activité interne 1 et d'activité externe 0 d'un graphe ordonné et l'ensemble de ses orientations acycliques avec un unique puits et une unique source adjacents. Plus généralement ces algorithmes s'étendent à une correspondance préservant les activités entre arbres couvrants et orientations. Pour certains ordres totaux de l'ensemble des arêtes, ils fournissent également une bijection entre arbres couvrants d'activité externe 0 et orientations acycliques ayant un unique puits donné. Cette construction utilise notamment une décomposition active des orientations d'un graphe qui étend la notion de composantes d'orientations acycliques avec unique puits.

AMS CLASSIFICATION. Primary: 05C99. Secondary: 05B35 52C40.
KEYWORDS: graph, spanning tree, activity, directed graph, acyclic, orientation, source, sink, algorithm, bijection, Tutte polynomial, matroid, oriented matroid.

1. INTRODUCTION

The Tutte polynomial $t(G;x,y)$ of a graph G is a two variable polynomial equivalent, up to simple algebraic transformations, to the generating function of cardinality and number of connected components of subsets of edges of G. Numerous important numerical invariants of G such as the numbers of spanning trees, of q-colorings, of acyclic orientations of G, etc. are evaluations of $t(G;x,y)$. We refer the reader to [1] for a comprehensive survey of properties and applications of Tutte polynomials of graphs, and, more generally, matroids.

Suppose the edge-set of G is linearly ordered. W.T. Tutte has shown

$$t(G;x,y) = \sum_{i,j} t_{i,j} x^i y^j$$

where $t_{i,j}$ is the number of spanning trees of G such that i edges are smallest in their fundamental cocycle and j edges are smallest in their fundamental cycle [17]. On the other hand, M. Las Vergnas has shown that

$$t(G;x,y) = \sum_{i,j} o_{i,j} 2^{-i-j} x^i y^j$$

where $o_{i,j}$ is the number of orientations of G such that i edges are smallest in some directed cocycle and j edges are smallest in some directed cycle [14]. This last formula generalizes a well-known result of R. Stanley: the number of acyclic orientations of G is equal to $t(G;2,0)$ [16]. Note that this result is actually a special case of a theorem of R. Winder [19] counting the number of regions of an hyperplane arrangement.

Comparing these two expressions for $t(G;x,y)$ we get $o_{i,j} = 2^{i+j} t_{i,j}$ for all i,j. A natural question arises of a bijective proof for this formula [14]. The problem is to define a correspondence between

(*) CNRS, Paris.

spanning trees and orientations, preserving parameters (i, j), called *activities* in the literature, and compatible with the above formula. More precisely, the desired correspondence should associate with an (i, j)-*active* spanning tree of G, a set of 2^{i+j} (i, j)-active orientations of G, in such a way that each orientation of G is the image of a unique spanning tree. The main object of the present paper is to describe such a correspondence, called here the *active tree-orientation correspondence*.

Spanning trees and orientations with $(1, 0)$ activities - or, dually, $(0, 1)$ activities - constitute the main case of our construction. Several papers of the literature deal with $(1, 0)$-orientations of graphs, i.e. acyclic orientations with adjacent unique source and sink. Enumerations of $(1, 0)$-orientations are studied by C. Greene and T. Zaslavsky in [12] for graphs, zonotopes and hyperplane arrangements. In particular, they prove that the number of acyclic orientations of a graph with adjacent unique source and sink is $2\beta(G)$, where $\beta(G) = t_{1,0}$. Equivalently, we have $o_{1,0} = 2t_{1,0}$ (implying that this number does not depend on the particular source and sink). In [6] bijective proofs are given of a result of [12] on acyclic orientations with unique sink (see below, and Section 6). Orientations with $(1, 0)$ activities are studied in [5] for their relevance in several graph algorithms. On the other hand, the external activity of a spanning tree has recently retained some attention in relation with the chip-firing game and the sandpile model [3] (see also [2] for the particular case of K_n and parking functions).

Section 3 contains the main results. Two dual algorithms establish a bijection between spanning trees and orientations with $(1, 0)$ activities. In Section 4, we obtain as a corollary, a bijection for $(0, 1)$ activities. In Section 5, these bijections are extended to a correspondence between spanning trees and orientations consistent with the formula $o_{i,j} = 2^{i+j} t_{i,j}$, thus answering the above question. We point out that this correspondence not only preserves activities but also active elements. The construction uses reductions from general activities to the $(1, 0)$ case. In Section 6, we show that the correspondence of Section 5 produces a bijection between internal spanning trees and acyclic orientations with a unique sink at a given vertex.

A bijection between acyclic orientations with a unique fixed sink and internal spanning trees has recently appeared in [6]. We observe that this bijection is not activity-preserving, whereas the bijection in Section 6 is activity-preserving. The correspondence of Section 3 answers a question of [6] (see (a) p.145). Several years ago, one of the present authors defined in an extended abstract [15] - not quoted in [6] - a different activity-preserving correspondence between spanning trees and orientations in graphs. This correspondence may probably not be generalized beyond regular matroids. The present one generalizes in a natural way to any oriented matroid [11]. The main results have been presented in the Ph. D. Thesis [7]. Some particular cases are studied in [8][9] (see also [10] for a survey). The graphical case is the object of the present paper (extended from FPSAC02 Proceedings). In this case, interesting specific properties involving vertices can be established (see Sections 6 and 7). An enumeration of acyclic orientations with a unique sink in a graph, constructed from a linear ordering of the vertices, and involving the coefficients of the chromatic polynomial, has been described by B. Lass in [13], linked to constructions by X. Viennot [18], P. Cartier, D. Foata, and I. Gessel. This construction appears in Section 7 to be a particular case of the present one: for a linear ordering of the edges compatible with the ordering of the vertices, we obtain the same partition for acyclic orientations with unique given sink.

Our point of view is matroidal: the correspondence depends on a linear ordering of the edges and the cycle-cocycle duality allows, for instance, to consider all orientations - not only the acyclic ones.

2. Notation and terminology

The present paper deals exclusively with graphs. We point out that definitions and results of this section have extensions to matroids and oriented matroids. Throughout the paper, if no confusion results, we will implicitly assume that graphs under consideration are connected, and that cycles and cocycles are *elementary* (i. e. minimal for inclusion). Graphs considered in the paper may have loops or multiple edges.

Let G be a graph with edge-set E, and $T \subseteq E$ be a spanning tree of G. For $e \in E \setminus T$, we denote by $C(T; e)$ the *fundamental cycle* of e with respect to T, i.e. the unique cycle contained in $T \cup \{e\}$, obtained from the unique path of T joining the two vertices of e. For $e \in T$, we denote

by $C^*(T;e)$ the *fundamental cocycle* of e with respect to T, i.e. the unique cocycle contained in $(E \setminus T) \cup \{e\}$. The cocycle $C^*(T;e)$ is the set of edges of G joining the two connected components of $T \setminus \{e\}$. For $e \in E \setminus T$ and $f \in T$, we have clearly $f \in C(T;e)$ if and only if $e \in C^*(T;f)$, and then $C(T;e) \cap C^*(T;f) = \{e,f\}$.

We say that a graph G is *ordered* if its edge-set E is linearly ordered. The notion of *activities* of a spanning tree T in an ordered graph G is due to W.T. Tutte [17]. The *internal activity* $\iota(T)$ is the number of edges $e \in T$ smallest in their fundamental cocycle $C^*(T;e)$, and the *external activity* $\varepsilon(T)$ is the number of edges $e \in E \setminus T$ smallest in their fundamental cycle $C(T;e)$. We denote by $t_{i,j}(G)$, or simply $t_{i,j}$, the number of spanning trees of G such that $\iota(T) = i$ and $\varepsilon(T) = j$.

The *Tutte polynomial* $t(G;x,y)$ has been introduced by W.T. Tutte in [17], under the name *dichromate* to generalize in a self-dual way the chromatic polynomial of a graph $G = (V,E)$, as

$$t(G;x,y) = \sum_{A \subseteq E} (x-1)^{c(A)-c(E)}(y-1)^{|A|-|V|+c(A)}$$

where $c(A)$ denotes the number of connected components of the graph (V,A) for $A \subseteq E$ (counting each isolated vertex for one component). Then, in order to give a combinatorial interpretation of the coefficients, Tutte has shown, by deletion/contraction of the greatest element, that

$$t(G;x,y) = \sum_{i,j \leq 0} t_{i,j} x^i y^j.$$

This formula implies that $t_{i,j}$ does not depend on the linear ordering.

A cycle resp. cocycle in a directed graph is *directed* if all its edges are directed consistently. The *(primal) orientation activity* of an ordered directed graph G, or O*-activity*, denoted by $o(G)$, is the number of edges smallest in some directed cycle. The *dual orientation activity* of G, or O^**-activity*, denoted by $o^*(G)$, is the number of edges smallest in some directed cocycle. We denote by $o_{i,j}(G)$ the number of orientations $\overrightarrow{G}$ of G such that $o^*(\overrightarrow{G}) = i$ and $o(\overrightarrow{G}) = j$. The definitions of O- and O^*-activities have been introduced in [14] in view of the formula

$$t(G;x,y) = \sum_{i,j} o_{i,j} 2^{-i-j} x^i y^j$$

This formula implies that $o_{i,j}$ does not depend on the ordering, and that $o_{i,j} = 2^{i+j} t_{i,j}$. The proof in [14] is by deletion/contraction of the greatest edge.

Internal and external activities of spanning trees, and also the two types of orientation activities, are dual notions from the point of view of graph duality. If G is a planar graph imbedded in the plane, and G^* is a dual of G, we have $\varepsilon_{G^*}(T) = \iota_G(E \setminus T)$. If G is directed, a *directed dual* of G is a planar dual G^* directed such that all directions of corresponding edges in G and G^* define rotations of the same type, clockwise or counterclockwise. Then, we have $o^*(G) = o(G^*)$. The graph G is said to be *acyclic* if there is no directed cycle, i.e. if $o(G) = 0$, and, dually, is said to be *totally cyclic* (or *strongly connected*) if $o^*(G) = 0$.

In a directed graph, given an elementary cycle C and a direction along C, we define C^+ as the set of edges of C directed consistently with the direction along C, and C^- as the set of edges directed in the opposite direction. An elementary cocycle D is the set of edges joining two subsets partitioning the vertex-set of G into two connected subgraphs. Given an elementary cocycle D and a direction between the two subsets of the partition induced by D on V, we define D^+ as the set of edges of D directed consistently with this direction between subsets, and D^- as the set of edges directed in the opposite direction. In a directed graph, the notation $C(T;e)$ for $e \in E \setminus T$ resp. $C^*(T;e)$ for $e \in T$ can be made precise by choosing the cycle direction resp. cocycle direction consistent with the direction of e, i.e. such that e is in the positive part.

We make a crucial use in the proof of Theorem 4 (Step 9) of the (directed) *graphical orthogonality property* $|C^+ \cap D^+| + |C^- \cap D^-| = |C^- \cap D^+| + |C^+ \cap D^-|$ between a cycle C and a cocycle D. In all other places, the weaker (directed) *orthogonality property* $C \cap D \neq \emptyset$ implies $(C^+ \cap D^+) \cup (C^- \cap D^-) \neq \emptyset$ and $(C^- \cap D^+) \cup (C^+ \cap D^-) \neq \emptyset$ suffices for our purpose. A more general proof for Theorem 4 using only this last orthogonality property is made in [11] (see also [7]). We mention that the graphical orthogonality property characterizes regular matroids (Minty 1975), whereas the orthogonality property characterizes oriented matroids (Bland-Las Vergnas 1978). See for instance [1] for generalization of the Tutte polynomial in matroids.

3. The bijection for $(1,0)$-activities

We recall that $t_{1,0}(G) \neq 0$ if and only if the graph G is 2-connected and has no loop [1].

Proposition 1. *Let G be an ordered directed graph, with smallest edge $e_1 = s's''$ directed from s' to s''. Then $o^*(G) = 1$ and $o(G) = 0$ if and only if G is acyclic, with unique source s' and unique sink s''.*

Proof. A directed graph has orientation activity 0 if and only if it is acyclic by definition. In an acyclic graph, e_1 belongs to a cocycle, so it is the smallest element of a cocycle. An acyclic graph has a source (otherwise one could construct easily a directed cycle). The set of edges having this source as an extremity is then a directed cocycle.

If the graph has dual activity 1 then this source must be an extremity of e_1 (because e_1 is the only possible minimal element of a cocycle). The same properties holding for the opposite orientation, the graph has a sink and any sink must be an extremity of e_1. This proves that the graph has unique source s' and unique sink s''.

Conversely, suppose G has a unique source s' and a unique sink s''. The two connected subgraphs induced by the partition of V defined by a cocycle are also acyclic. Hence, they must have a source and a sink. If the cocycle is directed, there exist a source of G in one component and a sink of G in the other. Necessarily these two vertices are s' and s'', and so e_1 belongs to the directed cocycle. □

Proposition 2. *Let G be a loopless ordered graph with edge-set E and $e_1 = \text{Min}\ (E)$, and let T be a spanning tree of G. Set $T = \{b_1 < b_2 < \ldots < b_r\}$ and $E \setminus T = \{a_1 < a_2 < \ldots < a_{n-r}\}$.*

(i) $\varepsilon(T) = 0$ if and only if $b_j = \text{Min}\ (E \setminus \bigcup_{1 \leq i < j} C^*(T; b_i))$ for $j = 1, 2, \ldots, r$.

(ii) $\iota(T) = 1$ if and only if $a_j = \text{Min}\ ((E \setminus \{e_1\}) \setminus \bigcup_{1 \leq i < j} C(T; a_i))$ for $j = 1, 2, \ldots, n-r$.

Proof. (i) Let $e = \text{Min}\ (E \setminus \bigcup_{1 \leq i < j} C^*(T; b_i))$, and suppose $e < b_j$. We have $e \notin T$, since $e \notin \{b_1, \ldots, b_{j-1}\}$ by definition. Set $C = C(T; e)$. If $b_i \in C$, we have $e \in C^*(T; b_i)$, therefore $C \cap \{b_1, \ldots, b_{j-1}\} = \emptyset$. It follows that $C \cap T \subseteq \{b_j, \ldots, b_r\}$, then $e = \text{Min}\ C$, hence $\varepsilon(T) > 0$.

Conversely, suppose $b_j = \text{Min}\ (E \setminus \bigcup_{1 \leq i < j} C^*(T; b_i))$ for $j = 1, 2, \ldots, r$. Let $e \in E \setminus T$. Set $C = C(T; e)$, and let $b_j = \text{Min}\ C \cap T$. We have $e \notin \bigcup_{1 \leq i < j} C^*(T; b_i))$, otherwise $b_i \in C$ for some $i < j$. Hence $b_j < e$, and e is not externally active.

(ii) Let $e = \text{Min}\ ((E \setminus \{e_1\}) \setminus \bigcup_{1 \leq i < j} C(T; a_i))$, and suppose $e < a_j$. We have $e \in T$, since $e \notin \{a_1, \ldots, a_{j-1}\}$ by definition. Set $D = C^*(T; e)$. If $a_i \in D$, we have $e \in C(T; a_i)$, therefore $D \cap \{a_1, \ldots, a_{j-1}\} = \emptyset$. It follows that $D \cap (E \setminus T) \subseteq \{a_j, \ldots, a_{n-r}\}$, then $e = \text{Min}\ D$, hence $\iota(T) > 1$.

Conversely, suppose $a_j = \text{Min}\ ((E \setminus \{e_1\}) \setminus \bigcup_{1 \leq i < j} C(T; a_i))$ for $j = 1, 2, \ldots, n-r$. Let $e \in T \setminus \{e_1\}$. Set $D = C^*(T; e)$, and let $a_j = \text{Min}\ D \setminus T$. We have $e \notin \bigcup_{1 \leq i < j} C(T; a_i)$, otherwise $a_i \in D$ for some $i < j$. Hence $a_j < e$, and e is not internally active. □

The following proposition defines the active correspondence for $(1,0)$- activities.

Proposition 3. *Let G be an ordered graph, with edge-set $E = \{e_1 = s's'' < e_2 < \ldots < e_n\}$, and T be a spanning tree of G with internal activity 1 and external activity 0. The following two algorithms produce the same acyclic orientation of G, with unique source s' and unique sink s''.*

Step 0 (in both algorithms): direct the smallest edge e_1 from s' to s''.

(i) Algorithm 1

Let $E \setminus T = \{a_1 = e_2 < a_2 < \ldots < a_{n-r}\}$.

Step $i = 1, 2, \ldots, n-r$: direct the undirected edges of $C(T; a_i)$ in the cycle direction opposite to the direction of its smallest edge.

(ii) Algorithm 2.

Let $T = \{b_1 = e_1 < b_2 < \ldots < b_r\}$.

Step 1: direct all edges $\neq e_1$ of $C^*(T; b_1)$ in the cocycle direction defined by e_1

Step $i = 2, \ldots, r$: direct the undirected edges of $C^*(T; b_i)$ in the cocycle direction opposite to the direction of its smallest edge.

An example for Algorithms 1 and 2 applied to the 4-wheel W_4 is given by Figure 1.

Proof. Since G has a spanning tree T with $(1,0)$ activities, it has no isthmus or loop.
(1) *Algorithm 1 directs all edges of G, and* $(1')$ *Algorithm 2 directs all edges of G*

We show inductively that all edges in $\bigcup_{1\le j\le i} C(T;a_j)$ are directed by Algorithm 1 for $i = 1,2,\dots,n-r$. We have to check that before Step i the edge $b = \text{Min } C(T;a_i)$ is directed. This is clear for $i=1$ since then $b=e_1$, so suppose $i\ge 2$. We have $b\in T$, otherwise $b=a_i$ would be externally active. If $b=e_1$, then a_i is directed at Step i of Algorithm 1. If $b\ne e_1$, then b is not the smallest element of its fundamental cocycle since $\iota(T)=1$. Set $a_j = \text{Min } C^*(T;b)$. We have $a_j<b<a_i$, hence a_j is directed before Step i by induction. Since $b\in C(T;a_j)$, the edge b has been directed by Algorithm 1 at a Step $\le j<i$, hence a_i is directed at Step i. On the other hand, since G has no isthmus, we have $\bigcup_i C(T;a_i)=E$, hence all edges of G are directed by Algorithm 1.

The proof of $(1')$ is dual.

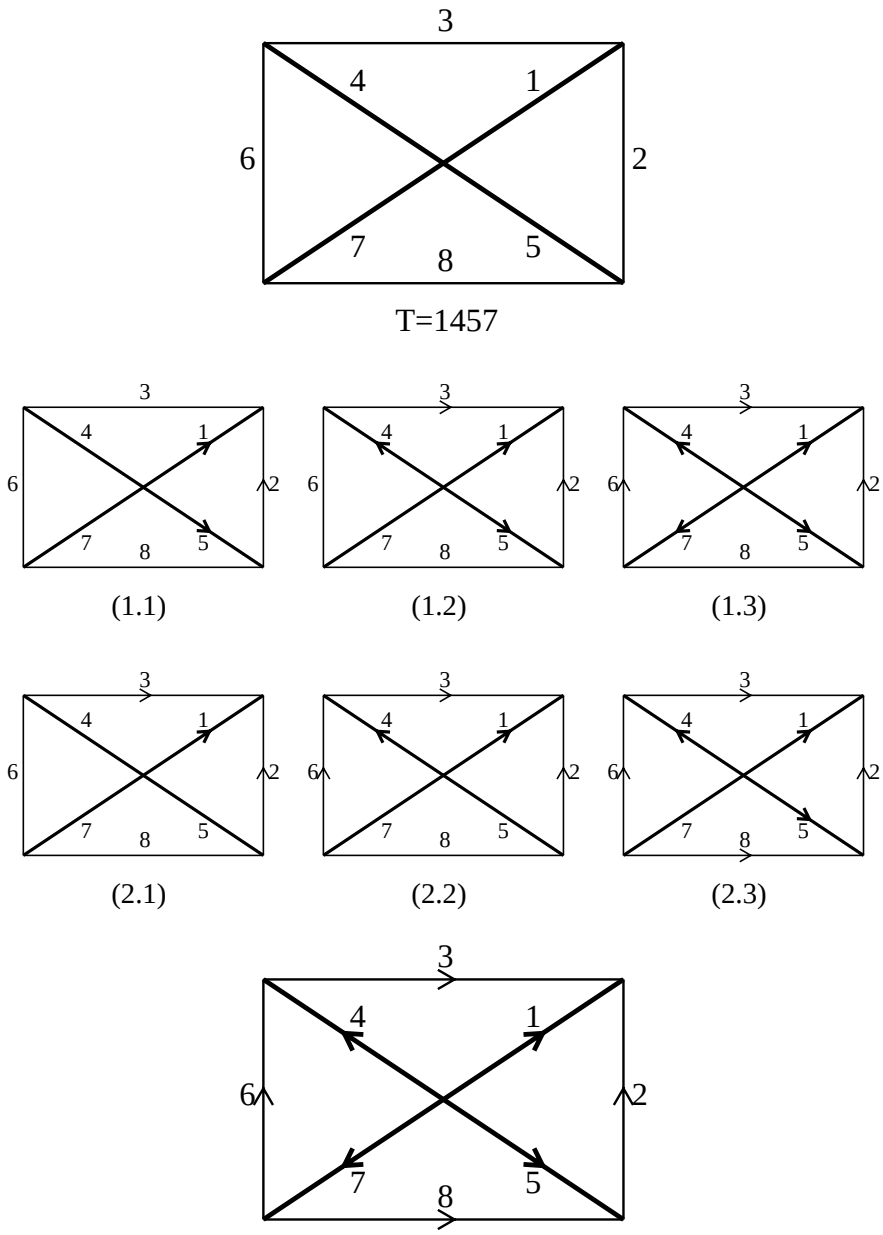

Figure 1

(2) *Algorithm 1 and Algorithm 2 produce the same orientation of* G

The proof is by induction on the rank in the ordering. Let $a \in E \setminus T$, and set $b = \text{Min } C(T;a)$, $a' = \text{Min } C^*(T;b)$. We have $b \in T$, otherwise $b = a$ is externally active, contradicting $\varepsilon(T) = 0$. The first case is $a' \in T$. Then the edge $b = a'$ is internally active, hence $b = e_1$ since $\iota(T) = 1$. In this case a and e_1 have opposite directions in $C(T;a)$ for Algorithm 1. We have $a \in C^*(T;e_1)$. Orthogonality implies a must have the same direction in $C^*(T;e_1)$ as e_1. This is the direction it is given in Step 1 of Algorithm 2. The second case is $a' \in E \setminus T$, and thus $b \neq e_1$. We have $a \in C^*(T;b)$ and $a' < b < a$. By Algorithm 1, the edges b and a have opposite directions in $C(T;a)$. We have $C(T;a) \cap C^*(T;b) = \{a,b\}$, hence by orthogonality a and b have the same direction in $C^*(T;b)$. As b is the smallest edge in T such that $a \in C^*(T;b)$, it follows that a is undirected when b is directed by Algorithm 2. Therefore a and b have the same direction in $C^*(T;b)$ for Algorithm 2, opposite to the direction of a'. Since by induction, the directions of b agree in Algorithms 1 and 2, the same conclusion holds for a.

The proof for $b \in T$ is similar and left to the reader.

Let $\overrightarrow{G}$ be the orientation of G constructed by Algorithms 1 and 2.

(3) $o^*(\overrightarrow{G}) = 1$ *and* (3′) $o(\overrightarrow{G}) = 0$

Suppose there is a directed cocycle D in $\overrightarrow{G}$ with $\text{Min } D \neq e_1$, contradicting (3). Since G has no isthmus, we have $\bigcup_i C(T;a_i) = E$. Let i be the smallest integer such that $D \cap C(T;a_i) \neq \emptyset$. Let $b \in D \cap C(T;a_i) \setminus \{a_i\}$. Since $b \in C(T;a_i) \setminus \{a_i\}$, we have $b \in T$. By the choice of i, the edge b is directed at step i of Algorithm 1. Set $e = \text{Min } C(T;a_i)$. We have $e \neq a_i$ otherwise a_i would be externally active, contradicting $\varepsilon(T) = 0$. If $i = 1$, we have $a_i = e_2$ and $e = e_1$, so $e \neq b$ according to our assumption. If $i \geq 2$ then, by (1), the edge e is directed before Step i of Algorithm 1 and since b is not we have $e \neq b$. Hence, for any i, by definition of Algorithm 1, both b and a_i are directed in the same direction of $C(T;a_i)$, opposite to the direction of e. It follows that all edges in $D \cap C(T;a_i)$ have the same direction in both D and $C(T;a_i)$, contradicting orthogonality.

Suppose there is a directed cycle C in $\overrightarrow{G}$, contradicting (3′). Since G has no loop, we have $\bigcup_i C^*(T;b_i) = E$. Let i be the smallest integer such that $C \cap C^*(T;b_i) \neq \emptyset$. Let $a \in C \cap C^*(T;b_i) \setminus \{b_i\}$. By the choice of i, the edge a is directed at step i of Algorithm 2. If $i = 1$, i.e. $b_1 = e_1$, then a and b_i have the same direction in $C^*(T;b_i)$ by definition of Step 1 of Algorithm 2. Suppose $i \geq 2$. Set $e = \text{Min } C^*(T;b_i)$. By (1′), the edge e is directed after Step $i-1$ of Algorithm 2 and since a is not, we have $e \neq a$. On the other hand, $e \neq b_i$ otherwise b_i would be internally active, implying $i = 1$ since $\iota(T) = 1$. Hence, by definition of Step $i \geq 2$ in Algorithm 2, both a and b_i are directed in the same direction of $C^*(T;b_i)$, opposite to the direction of e. It follows that all edges in $C \cap C^*(T;b_i)$ have the same direction in both C and $C^*(T;b_i)$, contradicting orthogonality. □

Theorem 4. *Let G be an ordered graph. The mapping defined by Algorithms 1 and 2 is a bijection from the set of spanning trees of G with $(1,0)$ activities onto the set of orientations of G with $(1,0)$ activities such that the direction of the first edge is fixed.*

Proof. Since $2t_{1,0} = o_{1,0}$ by [12], it suffices to show that the mapping is injective. Suppose there exist two different spanning trees $T = \{b_1 < b_2 < ... < b_r\}$ and $T' = \{b'_1 < ... < b'_r\}$ with $(1,0)$ activities such that Algorithms 1 and 2 produce the same directed graph.

(1) Let k be the smallest integer such that $C^*(T;b_k) \neq C^*(T';b'_k)$. By Proposition 2, we have $b_i = b'_i$ for all $i \leq k$. Set $b = b_k = b'_k$, $D = C^*(T;b)$ and $D' = C^*(T';b)$. We have $b \in D^+ \cap D'^+$.

(2) $T \cap D' \subseteq \{b = b_k, \ldots, b_r\}$, *and* (2′) $T' \cap D \subseteq \{b = b'_k, \ldots, b'_r\}$

If $i < k$, by (1) we have $b_i = b'_i \notin C^*(T';b'_k) = D'$.

(3) $T \cap D' \subseteq D'^+$, *and* (3′) $T' \cap D \subseteq D^+$

Let $b_i \in T \cap D'$. By (2), we have $i \geq k$. If $i = k$, then $b_i = b_k = b'_k = b \in D'^+$. Suppose $i > k$. Since $b_i \in D' = C^*(T';b'_k)$, the edge b_i is directed at a step $j \leq k$ of Algorithm 2 applied to T'. If $j < k$, we have $b'_j = b_j \in T$, hence $b_i \notin C^*(T;b_j) = C^*(T';b'_j)$, so that b_i cannot be directed at Step j.

Therefore $j = k$. If $k > 1$, the edges $b = b'_k$ and b_i are directed by Algorithm 2 in the same cocycle direction of D' (opposite to the direction of the smallest edge of D'), hence $b_i \in D'^+$. If $k = 1$, then, by definition of Step 1 in Algorithm 2, we have $D' = D'^+$.

(4) $|T \cap D'| \geq 2$ *and* (4′) $|T' \cap D| \geq 2$

Since T is a spanning tree and D' a cocycle, we have $|T \cap D'| \geq 1$. If $|T \cap D'| = 1$, then D' is a fundamental cocycle of T, and necessarily, since $b = b_k \in T$, we have $D' = C^*(T; b) = D$, contradicting the definition of k. Therefore $|T \cap D'| \geq 2$.

(5) Let a be the smallest element of the set

$$\bigcup_{e \in (T \cap D') \setminus \{b\}} C^*(T; e) \cup \bigcup_{e \in (T' \cap D) \setminus \{b\}} C^*(T'; e)$$

which is not empty by (4). By symmetry, we may suppose that $a = \text{Min } C^*(T; e)$ for some $e \in (T \cap D') \setminus \{b\}$. We have $e = b_\ell$ for some $\ell > k$ by (2). In particular $\ell > 1$.

(6) $a \notin T$

If $a \in T$, then $a = e$ and $a = \text{Min } C^*(T; a)$ is internally active. Hence $a = e_1 = b_1$, contradicting $\ell > 1$ (5).

Set $C = C(T; a)$.

(7) $a \notin T'$

Suppose $a \in T'$. We have $a > b$ by (6). If $a \in D$, we have $a \in (T' \cap D) \setminus \{b\}$, hence $a \leq \text{Min } C^*(T'; a)$ by (5). Therefore a is internally active, hence $a = e_1$, contradicting (6). So $a \notin D$. Since $a > b$, we have also $a \notin D'$.

Let $x \in C \cap D'$. We have $x \neq b$ since $a \notin D$, and $x \neq a$ since $a \notin D'$. Therefore, $x \in ((C \setminus \{a\}) \cap D') \setminus \{b\} \subseteq (T \cap D') \setminus \{b\}$. Hence $a \leq \text{Min } (C^*(T; x))$, and in fact $a = \text{Min } (C^*(T; x))$ since $x \in C = C(T; a)$ implies $a \in C^*(T; x)$. By Algorithm 2 applied to T, the edge x is directed in the cocycle direction opposite to a in the cocycle $C^*(T; x)$, hence by orthogonality a and x have the same cycle direction on C, i.e. $x \in C^+$. On the other hand, we have $x \in D' = C^*(T'; b_k)$ and $x \notin C^*(T'; b'_i) = C^*(T; b_i)$ for $i < k$, since x in T. Hence, the edge x is directed at Step k of Algorithm 2 applied to T'. Since $x > b_k = b$, the edges b and x have the same cocycle direction in D', i.e. $x \in D'^+$. It follows that $C \cap D' \subseteq C^+ \cap D'^+$.

By (5), we have $a \in C^*(T; e)$, hence $e \in C(T; a) = C$, and also $e \in D'$. We have $e \in C \cap D'$ and $C \cap D' \subseteq C^+ \cap D'^+$, contradicting the orthogonality property.

Set $C' = C(T'; a)$. We have $a \in C^+ \cap C'^+$.

(8) $(C \cap D') \setminus \{a, b\} \subseteq C^+ \cap D'^+$ *and* (8′) $(C' \cap D) \setminus \{a, b\} \subseteq C'^+ \cap D^+$

We have $C \setminus \{a\} \subseteq T$, hence $(C \cap D') \setminus \{a, b\} \subseteq T \cap D' \subseteq D'^+$ by (3). Let $x \in (C \cap D') \setminus \{a, b\}$ We have $x \in (T \cap D') \setminus \{b\}$, hence $a \leq \text{Min } C^*(T; x)$ by (5). On the other hand $x \in C = C(T; a)$, hence $a \in C^*(T; x)$. It follows that $a = \text{Min } C^*(T; x)$. We have $x = b_i$ with $i > k$. By Algorithm 2 applied to T, at Step i the edge $x = b_i$ is directed in the cocycle direction of $C^*(T; x)$ opposite to the direction of a. Now $C(T; a) \cap C^*(T; x) = \{x, a\}$, hence by orthogonality the edges x and a have the same cycle direction in the cycle C, i.e. $x \in C^+$.

(9) $C \cap D' \subseteq \{a, b\}$ *and* (9′) $C' \cap D \subseteq \{a, b\}$

Suppose $C \cap D' \setminus \{a, b\} \neq \emptyset$. By (8) and graphical orthogonality, we have $a \in D'^-$ or $b \in C^-$, and both hold if $\{a, b\} \subseteq C \cap D'$.

Suppose $a \in D'^-$. Then $a \in C' \cap D' \subseteq \{a, b\}$, hence by orthogonality, we have $C' \cap D' = \{a, b\}$ and $b \in C'^+$. By (8) and graphical orthogonality applied to $C' \cap D$, we have $a \in D^-$. Then $a \in C \cap D \subseteq \{a, b\}$, hence by orthogonality, we have $C \cap D = \{a, b\}$ and $b \in C^+$. Therefore $\{a, b\} \subseteq C \cap D'$, both $a \in D'^-$ and $b \in C^-$ should hold: contradiction.

The case $b \in C^-$ is similar, and left to the reader.

(10) By (5), we have $a = \text{Min } C^*(T; e)$, with $e = b_\ell \in (T \cap D') \setminus \{b\}$ and $\ell > k$. We have $e \in C = C(T; a)$, hence $e \in C \cap ((T \cap D') \setminus \{b\}) \subseteq (C \cap D') \setminus \{b\} \subseteq \{a\}$ by (9). Therefore $a = e$. Hence $a = \text{Min } C^*(T; a)$, i.e. a is internally active. Then, necessarily, $a = e_1 = b_1$, since T and T' have internal activity 1, contradicting $e = b_\ell$ with $\ell > 1$ (5). □

NB. We point out that the *converse algorithm*, from $(1, 0)$-active orientations to $(1, 0)$-active spanning trees, is more involved. It has been obtained in the geometric and general context of oriented matroids. A possible construction is by deletion/contraction of the greatest element [11] (see also [7]). But overall its main definition in [11] is in terms of extensions of linear programming.

4. The bijection for $(0,1)$-activities

The case of $(0,1)$-activities can be reduced to $(1,0)$-activities by the following Proposition, whose proof is straightforward.

Proposition 5. *Let G be an ordered graph with edge-set $\{e_1 < e_2 \dots\}$.*

(i) If T is a spanning tree with $(1,0)$ activities, then $T \setminus \{e_1\} \cup \{e_2\}$ is a spanning tree with $(0,1)$ activities. The mapping defined by $T \mapsto T \setminus \{e_1\} \cup \{e_2\}$ is a bijection between the sets of spanning trees of G with $(1,0)$ resp. $(0,1)$ activities.

(ii) If $\overrightarrow{G}$ is an orientation of G with $(1,0)$ orientation activties, then the orientation of G, denoted $-_{e_1}\overrightarrow{G}$, obtained by reversing the direction of e_1, has $(0,1)$ orientation activities. The mapping defined by $\overrightarrow{G} \mapsto -_{e_1}\overrightarrow{G}$ is a bijection between the sets of orientations of G with $(1,0)$ resp. $(0,1)$ activities. □

A bijection for $(0,1)$ activities can be obtained either from the bijection for $(1,0)$ activities in G by means of Proposition 5, or from the bijection for $(1,0)$ activities in the dual graph G^* when G is planar (or in the dual oriented matroid in general). It can be shown that these two bijections are identical, providing a *strong duality property* for the correspondence, see [11] for details (or also [7]).

Figure 2 shows an application of Proposition 5 to the planar graph W_4 considered in Figure 1. We observe that the $(0,1)$-orientation associated with the spanning tree $T = 2368$ is different from the orientation associated with the same tree by the algorithm of [15]: the edge 8 of [12 Fig.4] is reversed in Figure 2.

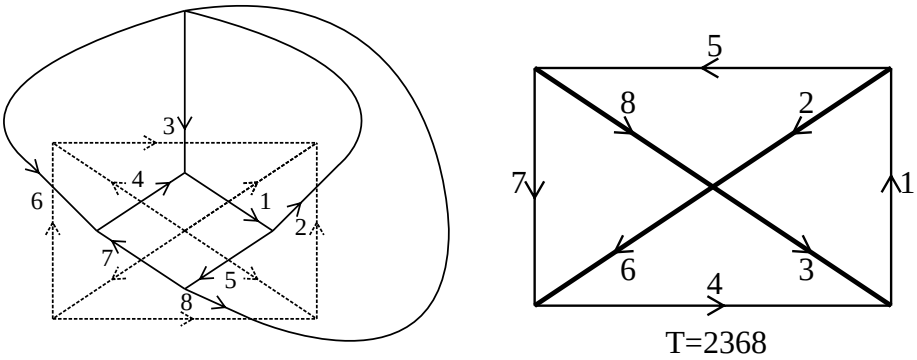

Figure 2

5. The general correspondence

In this section, we construct the *active (tree-orientation) correspondence* associating with a general spanning tree of activities (i,j) a set of 2^{i+j} orientations with the same activities, such that each orientation is the image of a unique spanning tree.

The main content of this section is that the construction of the active correspondence can be reduced to the $(1,0)$ case by means of *active partitions* of the edge-set. It turns out that, contrasting with Sections 3,4,6, where specific properties of graphs are used, Section 5 is a mere specialization to graphs of properties holding in matroids and oriented matroids. In consequence, we will only sketch the main results, and refer the reader to [11] (see also [7]) for details and proofs.

Active partitions can be described either in terms of spanning trees in an ordered graph, or of orientations in an ordered directed graph. One main point is that if a spanning tree and an orientation are related by the active correspondence, then the two definitions produce the same active partition. The definition of an active partition in terms of spanning trees is much more involved than its definition in terms of orientations. However, in both cases, the first step is to separate the two dual types of activities, and the second step is to reduce the construction to $(1,0)$ activities.

Let G be an ordered graph with edge-set E, and T be a spanning tree of G with activities (i,j). The first step is to construct a set $F \subseteq E$ whose elements are called *external*. Then $E \setminus F$ is the set of *internal* elements. For the reader's convenience, we sketch the construction of F (see [4] for more details and proofs).

For $X \subseteq E$ set

$$f(X) = X \cup \bigcup_{e \in T \cap X} C^*(T;e) \cup \{ e \in E \mid \emptyset \subset C^*_<(T;e) \subseteq X \}$$

where $C^*_<(T;e)$ is the set of elements of $C^*(T;e)$ strictly smaller than e, and

$$\hat{f}(X) = \bigcup_{i \geq 1} f^i(X).$$

Let $a_1 < ... < a_i$ be the internally active elements of T, and let $F = E \setminus \hat{f}(\{a_1, ..., a_i\})$.

Then F separates the internal and external activities: $T \setminus F$ is a spanning tree with $(i,0)$ activities of the contraction G/F of G by F, and $T \cap F$ is a spanning tree with $(0,j)$ activities of the subgraph $G(F)$ [4].

Let $\overrightarrow{G}$ be an orientation associated with T by the active correspondence. By a classical result of G. Minty (1960), in a directed graph an edge belongs either to a directed cycle or to a directed cocycle, but not to both. Then F is the *totally cyclic part* of $\overrightarrow{G}$, i.e. the union of all directed cycles of $\overrightarrow{G}$, and $E \setminus F$ is the *acyclic part* of G, i.e. the union of all directed cocycles of $\overrightarrow{G}$.

It follows from this first reduction that without loss of generality, we may restrict the construction to $(i,0)$ or $(0,j)$ activities. Furthermore, internal and external elements, and also totally cyclic parts and acyclic parts, being related by duality (cycles and cocycles play dual parts), we may restrict ourselves to spanning trees with external activity 0, or *internal* spanning trees, and acyclic orientations. The second step reduces the construction to $(1,0)$ activities.

For an internal spanning tree T with internally active elements $a_1 < ... < a_i$, for $j = 1, 2, ..., i$ set

$$A_j = \hat{f}(\{a_j, ..., a_i\}) \setminus \hat{f}(\{a_{j+1}, ..., a_i\})$$

The *active partition* for T is the partition

$$E = A_1 + ... + A_i.$$

Set

$$T_j = T \cap A_j,$$

then $T = T_1 + ... + T_i$. And set

$$G_j = G/(A_1 \cup A_2 \cup \ldots \cup A_{j-1}) \setminus (A_{j+1} \cup A_{j+2} \cup \ldots \cup A_i)$$

where, as usual $\setminus$ denotes the deletion, and $/$ denotes the contraction.

Let $\overrightarrow{G}$ be an acyclic orientation of the ordered graph G with $o^*(\overrightarrow{G}) = i$, and let $a_1 < ... < a_i$ be its O^*-active edges. Then, for $j = 1, 2, \ldots, i$, set

$$A_j = \bigcup_{\substack{D \text{ directed cocycle} \\ \text{Min } D = a_j}} D \setminus \bigcup_{\substack{D \text{ directed cocycle} \\ \text{Min } D > a_j}} D$$

The *active partition* of $\overrightarrow{G}$ for the orientation is the partition

$$E = A_1 + A_2 + \cdots + A_i$$

The *activity class of orientations* of $\overrightarrow{G}$ is the set of 2^i orientations obtained by reversing all edge directions in the 2^i possible unions of some of the A_j's. As easily seen, these 2^i orientations have the same active partition.

Set

$$\overrightarrow{G}_j = \overrightarrow{G}/(A_1 \cup A_2 \cup \ldots \cup A_{j-1}) \setminus (A_{j+1} \cup A_{j+2} \cup \ldots \cup A_i).$$

Theorem 6. *The sets T_j are spanning trees with $(1,0)$ orientation activities in the graphs G_j on the edge-sets A_j. The graphs $\overrightarrow{G}_j$ on the edge-sets A_j have $(1,0)$ orientation activities. The number of acyclic orientations with given active partition is 2^i times the number of spanning trees with same active partition.*

Using the bijection of Section 3 on each tree T_j for $j = 1, 2, \ldots, i$, we associate with each T_j a directed graph $\overrightarrow{G}_j$ and its opposite with $(1,0)$ activities. Then let $\overrightarrow{G}$ be the directed graph obtained by directing the edges of G with respect to the directions in the i minors G_j. Then $\overrightarrow{G}$ has $(i,0)$ activities. We define the active correspondence by associating the directed graph $\overrightarrow{G}$ with the spanning tree T, and the spanning tree T with all graphs in the activity class of $\overrightarrow{G}$. This active correspondence associates the same spanning tree with all orientations in an activity class, and moreover preserves active elements and active partitions.

The proofs of Theorem 6 and all the results mentioned above, and the statements and proofs of the mixed case, when both F and $E \setminus F$ are not empty, can be found in [11] (see also [7]) in the more general context of oriented matroids. We will illustrate its content in Section 6 on an example (Figures 3 and 4).

The activity classes constitute a partition of the set of orientations of a graph. The active correspondence induces an *activity preserving bijection between spanning trees and activity classes of orientations.*

6. A bijection for acyclic orientations with a unique sink

C. Greene and T. Zaslavsky have shown in [12] that the number of acyclic orientations of a graph G with a unique sink at a given vertex is equal to $t(G;1,0)$. In [6], D.D. Gebhard and B.E. Sagan give three bijective proofs of this result. The third one [6] Th.4.1 is by means of an explicit bijection between acyclic orientations with a given unique sink and internal spanning trees, as suggested by the relation $t(G;1,0) = \sum_i t_{i,0}$.

It turns out that the correspondence defined in Section 5 provides another bijection between internal spanning trees and acyclic orientations with a given unique sink, which moreover preserves active edges. The internally active edges of an internal tree become O^*-active edges of the orientation.

Lemma 7. *In an ordered graph, the smallest edge of any cocycle belongs to the lexicographically smallest spanning tree.*

Proof. Let G be an ordered graph, and T_0 be its lexicographically smallest spanning tree.

(1) Let $e \in T_0$ and D be the fundamental cocycle of e with respect to T_0. Then e is the smallest element of D. Otherwise there is $a \in D$ such that $a < e$, and the spanning tree $T_0 - e + a$ is lexicographically smaller than T_0.

(2) Conversely, let X be an elementary cocycle of G with smallest element a. Suppose $a \notin T_0$. Let $e \in X \cap T_0$, and D be the fundamental cocycle of e with respect to T_0. Since e is the smallest element of D by (1), we have $a \notin D$. By elimination there is a cocycle Y such that $a \in Y \subseteq (D \cup X) - e$. Since a is smallest in X and e smallest in D, we have a smallest in Y. We have $Y \cap T_0 \subseteq (X \cap T_0) - e$, hence $|Y \cap T_0| < |X \cap T_0|$. Applying inductively this property, we obtain that there is X with $X \cap T_0 = \emptyset$, a contradiction since cocycles and spanning trees always meet. Hence $a \in T_0$. □

We say that a spanning tree T in an ordered graph is *increasing with respect to a vertex s* if the edges increase for the ordering along any path of T beginning at s.

Proposition 8. *Let G be an ordered graph such that the lexicographically smallest spanning tree is increasing with respect to a vertex s.*

Then there is exactly one acyclic orientation with a unique sink at s in each activity class of acyclic orientations of G, namely the unique orientation in the class defined by reversing or not all edge directions in subsets of the active partition in order to obtain that active edges are directed towards s on T_0.

Note that the hypothesis implies s is an extremity of the smallest (non loop) edge of G.

Proof. Let T_0 denote the lexicographically smallest spanning tree of $G = (V, E)$. By hypothesis T_0 is increasing with respect to s.
(1) *The edges of a directed (elementary) cocycle D defined by a 2- partition $V = V_1 + V_2$ in an acyclic orientation $\overrightarrow{G}$ of G with a unique sink at $s \in V_1$ are directed from V_2 to V_1.*

Since $\overrightarrow{G}$ is acyclic, $\overrightarrow{G}(V_2)$ contains at least one sink s'. If the edges of D were directed from V_1 to V_2, then s' would be a sink of G with $s \neq s'$, contradicting the uniqueness.
(2) *If $\overrightarrow{G}$ is an acyclic orientation of G with a unique sink at s, then the O^*-active edges of T_0 are directed toward s on T_0.*

Let a be a O^*-active edge of $\overrightarrow{G}$, and D be a directed cocycle with smallest edge a. By Lemma 7, we have $a \in T_0$. Since T_0 is increasing and a smallest in D, there is no edge of D on the path of T_0 from s to the closest vertex of a. Hence, with notation of (1), this path is in V_1, and by (1) a is directed towards s.
(3) Conversely, let $\overrightarrow{G}$ be the (unique) graph in a given activity class of acyclic orientations of G such that the O^*-active edges of this class are directed towards s on T_0. The graph $\overrightarrow{G}$ exists and is unique by the properties stated in Section 5. *The graph $\overrightarrow{G}$ has a unique sink at s.*

Since $\overrightarrow{G}$ is acyclic, it has at least one sink s'. The smallest edge a of $\overrightarrow{G}$ incident to s' is in T_0 by Lemma 7. Since the edge a is directed towards s in T_0 by construction of $\overrightarrow{G}$, and T_0 is increasing with respect to s, if $s \neq s'$ then there exists another edge $b < a$ on T_0 incident to s', contradicting the minimality of a. □

Theorem 9. *Let G be an ordered graph, such that the lexicographically smallest spanning tree is increasing with respect to a vertex s.*

Then the mapping sending an internal spanning tree T of G to the unique acyclic orientation with a unique sink at s belonging to the activity class of orientations associated with T by the correspondence of Theorem 6, is an activity-preserving bijection from the set of internal spanning trees of G onto the set of acyclic orientations of G with a unique sink at s. □

Theorem 9 is a straightforward corollary of Theorem 6 and Proposition 8. Note that given any spanning tree T in a graph G, and a vertex s, it is always possible - and easy - to linearly order the edges of G so that T is the lexicographically smallest spanning tree and is increasing with respect to s. Label the edges of T by consecutive integers $1, 2, \ldots$ in successive layers defined by their distance to s. After T has been labelled, label arbitrarily the edges not in T.

The bijections provided by Theorem 9 are different from the Gebhard-Sagan bijections. We observe that these bijections are activity-preserving by construction, whereas Gebbard-Sagan bijections are not in general. The orientation in Figure 1 of [10] p.139 has O^*-activity 2, but the spanning tree constructed by the algorithm has internal activity 3.

Figure 3 illustrates Theorem 9 on the graph W_4, already used in Figures 1 and 2. The Tutte polynomial of W_4 is

$$t(W_4; x, y) = x^4 + y^4 + 4x^3 + 4x^2y + 4xy^2 + 4y^3 + 6x^2 + 9xy + 6y^2 + 3x + 3y$$

The graph W_4 has $t(W_4; 1, 0) = 14$ internal spanning trees.

The lexicographically smallest spanning tree 1236 is increasing with respect to the NE (North-East) vertex. For each acyclic orientation with unique sink at the NE vertex, we have indicated the internal spanning tree T given by Theorem 9 (its edges are drawn in heavy lines). We have also indicated the active partition. The internal activity is the number of parts of the active partitions, and the active edges are the first element of each part. By reversing all edge directions in arbitrarily chosen parts of the active partition, we get the activity class associated with T. By Proposition 8, in each activity class exactly one acyclic orientation has a unique sink at the NE vertex: this orientation is shown on Figure 3.

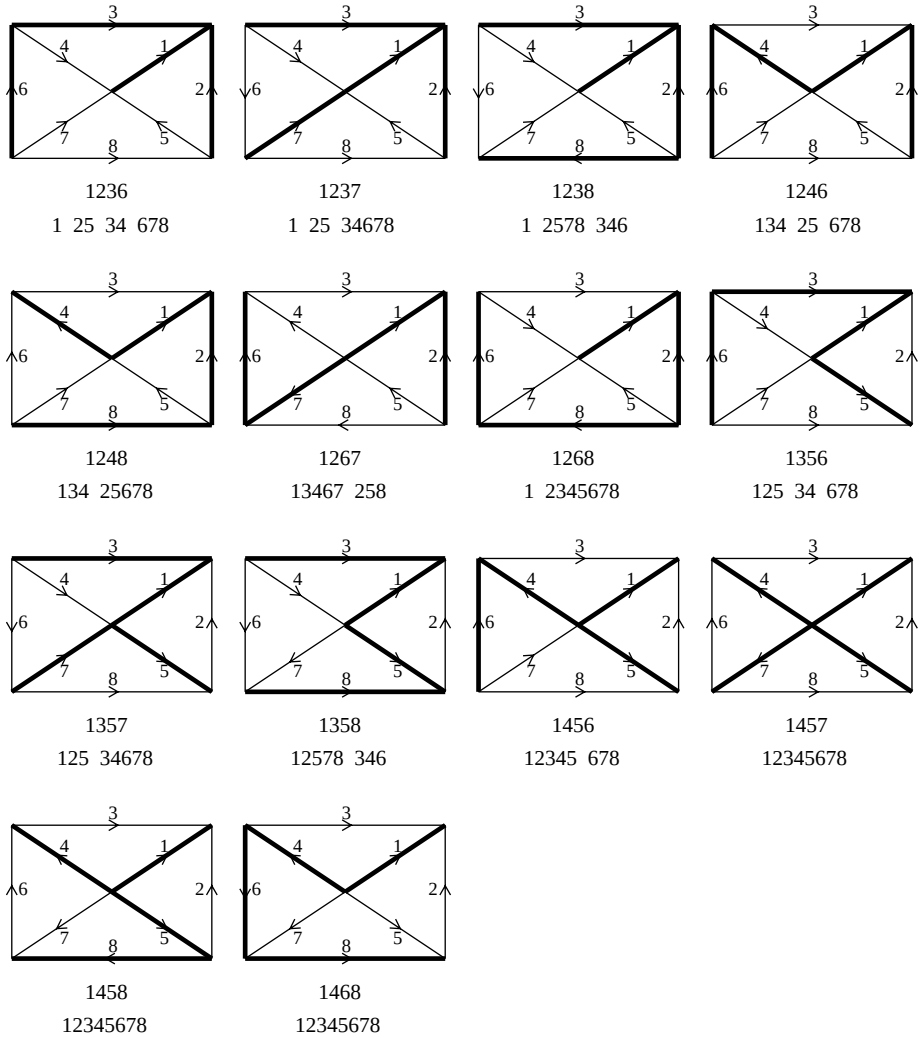

Figure 3

Hence Figure 3 also illustrates the bijection from internal spanning trees to activity classes of acyclic orientations (a restriction of the active correspondence) defined in Section 5.

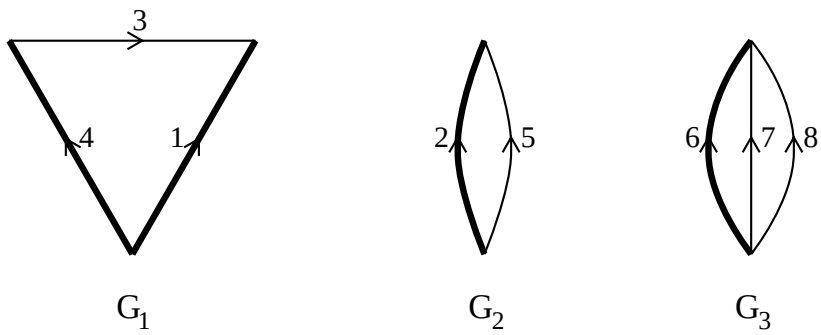

Figure 4

Figure 4 gives details of the construction of Section 5 for the spanning tree $T = 1246$. The active partition is 134+25+678. The graphs of Theorem 6 are $G_1 = G \setminus 25678$, $G_2 = G/134 \setminus 678$, $G_3 = G/12345$. The spanning trees with $(1,0)$ activities being unique in these very simple graphs one can check easily that we have $T_1 = 14$, $T_2 = 2$, $T_3 = 6$, and, of course, $1246 = 14 + 2 + 6$.

7. Link with components obtained from linear vertex ordering

An enumeration of acyclic orientations with a unique sink in a graph, using the coefficients of the chromatic polynomial, has been described by B. Lass in [13], in relation with results by P. Cartier, D. Foata, I. Gessel and X. Viennot [18]. We prove in this section that the decomposition of an acyclic orientation with a unique sink into V-*components*, constructed in [13] by means of a linear ordering of the vertices, is a particular case of the active partition of the present paper, for some suitably defined linear ordering of the edges.

The following definitions and results are introduced in [13]. We say that a linear ordering of $V = v_1 < ... < v_{r+1}$ *reflects the connectivity* of G if for all i, $1 < i \leq r+1$, the vertex v_i is adjacent to at least one vertex v_j with $j < i$.

Let $\overrightarrow{G}$ be an acyclic orientation of G with set of vertices $V = v_1 < ... < v_{r+1}$. We say that $w \in V$ is *accessible* from $v \in V$ if there exists a directed path from v to w. Let W_1 be the set of vertices of G accessible from $w_1 = v_1$, and inductively, if $V \setminus (W_1 \cup ... \cup W_{i-1}) \neq \emptyset$, let w_i be the smallest vertex in $V \setminus (W_1 \cup ... \cup W_{i-1})$ and let V_i be the set of vertices in $V \setminus (W_1 \cup ... \cup W_{i-1})$ accessible from w_i. Then let k be the integer such that $V = (W_1 + ... + W_k)$.

The sets $W_1, ..., W_k$ are called the V-*components* of $\overrightarrow{G}$, and k is the number of V-components of $\overrightarrow{G}$. Note as an example that, by definitions, the acyclic orientation of G defined by (v_i, v_j) directed from v_j to v_i when $v_i < v_j$, has exactly $r+1$ V-components $V = \{v_1\} + ... + \{v_{r+1}\}$.

A central result in [13] is that, for a connected graph $G = (V, E)$ with a linear ordering of $V = v_1 < ... < v_{r+1}$ reflecting the connectivity of G, the coefficient $t_{i,0}$ is the number of acyclic orientations of G with unique sink v_1 with $i+1$ V-components. This result can be seen as a corollary of the next Proposition.

Let $G = (V, E)$ be a connected graph, with a linear ordering of $V = v_1 < ... < v_{r+1}$ and a linear ordering of E. We say that these two linear orderings are *connectivity-tree-compatible*, or *ct-compatible* for short, if:
(i) the linear ordering of V reflects the connectivity of G
(ii) the minimal spanning tree $T_0 = b_1 < ... < b_r$ of G with respect to the linear ordering of E is increasing with respect to v_1
(iii) for all i, $1 \leq i \leq r$, $b_i = (v_{i+1}, v_j)$ with $v_j < v_{i+1}$.

Note that the property (iii) can be replaced by:
(iii') for all i, $1 \leq i \leq r$, the subgraph spanned by $\{v_1, ..., v_{i+1}\}$ is the subgraph spanned by $\{b_1, ..., b_i\}$.

Lemma 10. *Let $G = (V, E)$ be a connected graph.*

(i) for any linear ordering on V which reflects the connectivity of G, there exists a linear ordering on E ct-compatible with this ordering.

(ii) for any linear ordering on E for which the minimal spanning tree $T_0 = b_1 < ... < b_r$ of G is increasing with respect to a vertex v, there exists one and only one linear ordering on V ct-compatible with this ordering.

(iii) there exist ct-compatible linear orderings on V and E.

Proof. (i) We build T_0 by induction with $b_1 = (v_1, v_2)$ and, for $2 \leq i \leq r$, the edge b_i in the subgraph induced by $\{v_1, v_2, .., v_{i+1}\}$, not in the subgraph induced by $\{v_1, v_2, .., v_i\}$. Then we order the edges in T_0 by $b_1 < b_2 < ... < b_r$, and the edges in $E \setminus T_0$ arbitrarily with $e > b_r$ for $e \in E \setminus T_0$.

(ii) Necessarily $v = v_1$ is the smallest vertex, the second vertex v_2 is the other vertex of b_1, and, for all $3 \leq i \leq r+1$, the vertex v_i such that $v_1 < ... < v_i$ is the vertex of b_{i-1} not previously defined.

(iii) Obvious in view of (i), the existence of a linear ordering of the vertices reflecting the connectivity being clear. □

Lemma 11. *Let $G = (V, E)$ be a connected graph with ct-compatible linear orderings on V and E. Then for any connected subgraph H of G induced by $W \subseteq V$, the minimal edge in T_0 which is not an edge of H has an extremity equal to $min(V \setminus W)$.*

Proof. Let b_i be the minimal edge of $T_0 = b_1 < ... < b_r$ which is not an edge of H. If $b_i = b_1$ then the result is obvious. We assume now $i > 1$. Let G' be the graph induced by the connected component of $T_0 \setminus b_i$ containing b_1. Let j be such that $1 \leq j \leq i-1$. Since T_0 is increasing with respect to v_1, the edge b_j is an edge of G', and since b_i is smallest not in H, we have b_j in H. Then, since the linear orderings are ct-compatible, the vertices $v_1, ..., v_i$ are all vertices of G' and H. On the other hand v_{i+1}, an extremity of b_i by definition of compatibility between orders, is not a vertex of G' nor H since b_i is not an edge of G' and since the linear ordering of V reflects the connectivity of G. So $v_{i+1} = min(V \setminus W)$. □

Proposition 12. *Let $G = (V, E)$ be a connected graph with ct-compatible linear orderings on V and E. Let $\overrightarrow{G}$ be an acyclic orientation of G with unique sink $v_1 = min(V)$. Let $V = W_1 + ... + W_k$ be the partition of V into V-components, and $E = A_1 + ... + A_i$ the active partition of E, with respect to $\overrightarrow{G}$ (where the indices respect the linear ordering of the parts in the definitions).*

We have $k = i+1$, $W_1 = \{v_1\}$, and for all j, $1 \leq j \leq i$, $W_1 + W_2 + ... + W_{j+1}$ is the set of vertices of $G(A_1 + ... + A_j)$.

Proof. First $W_1 = \{v_1\}$ since v_1 is a sink. Let $a_1 < ... < a_i$ be the O^*-active elements of $\overrightarrow{G}$. Let $1 \leq j \leq i$. We prove the assertion by induction on j: assume that it is true for all $j' < j$. Let $a_j = (v_h, v_\ell)$ with $v_h < v_\ell$. It follows from the definition of the active partition that a_j is the smallest edge of T_0 which is not an edge of $G(A_1 + ... + A_{j-1})$. It follows from the definition of V-components and the induction hypothesis that $v_h \in W_1 + ... + W_{j-1}$. By Lemma 11, we have $v_\ell = min(V \setminus (W_1 + ... + W_{j-1}))$. Hence by definition of the V-components, $v_\ell = min(W_j) = w_j$.

Let v be a vertex of $G(A_1 + ... + A_j)$ with $v \notin W_1 + ... + W_{j-1}$. By definition of active partitions, $\overrightarrow{G}(A_1 + ... + A_j)/(A_1 + ... + A_{j-1})$ has a unique source v_ℓ and unique sink v_h, so there exists a directed path in $\overrightarrow{G}$ from v_ℓ to v, so $v \in W_j$.

Conversely, let $v \in W_j$. There exists a directed path in $\overrightarrow{G}$ from $v_\ell = w_j$ to v. On the other hand, since v_1 is the unique sink of $\overrightarrow{G}$, there exists a directed path from v to v_1. If v is not a vertex of $G(A_1 + ... + A_j)$, since v_ℓ and v_1 are vertices of $G(A_1 + ... + A_j)$, these paths induce a cycle in $\overrightarrow{G}/(A_1 + ... + A_j)$, but this is impossible since $E \setminus (A_1 + ... + A_j) = A_{j+1} + ... + A_i$ is a union of directed cocycles of $\overrightarrow{G}$ and so $\overrightarrow{G}/(A_1 + ... + A_j)$ is acyclic.

Since finally $W_1 + W_2 + ... + W_{j+1}$ is the set of vertices of $G(A_1 + ... + A_j)$ for all $1 \leq j \leq i$, it follows that $k = i+1$. □

This result states that for ct-compatible vertex and edge orderings the two constructions have the same outcome. It is remarkable that originally their respective inductive definitions used reverse orders: the active partition is built from the greatest active element to the smallest one, whereas V-components are built from the first vertex to the last one.

Consider the upper right orientation of W_4 in Figure 3, for which the active decomposition is shown on Figure 4. The ct-compatible linear ordering of the vertices is $a < b < c < d < e$ with a, b, c, d, e respectively the North-East, central, South-East, North-West and South-West vertices. The active partition is $E = 134 + 25 + 658$, the V-components are $V = \{a\} + \{b, d\} + \{c\} + \{e\}$. Indeed $\{a\} = W_1$ is the unique sink, $\{a, b, d\} = W_1 + W_2$ are the vertices of $G(134) = G(A_1)$, $\{a, b, c, d\} = W_1 + W_2 + W_3$ are the vertices of $G(12345) = G(A_1 + A_2)$ and of course $\{a, b, c, d, e\} = W_1 + W_2 + W_3 + W_4 = V$ are the vertices of $G(12345678) = G(A_1 + A_2 + A_3) = G$.

Finally, for ct-compatible linear orderings on V and E, an acyclic orientation $\overrightarrow{G}$ of G with unique sink v_1 has $k+1$ V- components if and only if $\overrightarrow{G}$ has dual activity k, thus the partition of the set of acyclic orientations with a unique given sink - which produces an enumeration with respect to the coefficients of the Tutte polynomial - is the same when built from V-components or from activity classes of orientations. However, the second point of view, based on edges and duality instead of vertices, 1) extends to all orientations and all linear orderings on E, 2) is related to a similar decompostion for spanning trees, and 3) generalizes to hyperplane arrangements and oriented matroids.

References

[1] T. Brylawski, J. Oxley, The Tutte polynomial and its applications, in Matroid applications, N. White ed., Cambridge University Press 1992, 123- 225

[2] J.S. Beissinger, U.N. Peled, A note on major sequences and external activity in trees, The Wilf Festschrift (Philadelphia, PA, 1996), Electron. J. Combin. 4 (1997), no. 2, Research Paper 4, approx. 10 pp. (electronic).

[3] R. Cori, I. Le Borgne, Sandpile model and Tutte polynomial, Proc. FPSAC01, Adv. in Appl. Math., to appear.

[4] G. Etienne, M. Las Vergnas, External and internal elements of a matroid basis, Discrete Math. 179 (1998), 111-119.

[5] H. de Fraysseix, P. Ossona de Mendez, P. Rosenstiehl, Bipolar orientations revisited, Discrete Applied Mathematics 56 (1995), 157-179.

[6] D.D. Gebhard, B.E. Sagan, Sinks in acyclic orientations of graphs, J. Combinatorial Theory Ser. B 80 (2000), 130-146.

[7] E. Gioan, Correspondance naturelle entre bases et réorientations des matroïdes orientés, Thèse de Doctorat de l'Université Bordeaux 1 (2002).

[8] E. Gioan, M. Las Vergnas, Bases, reorientations and linear programming in uniform and rank 3 oriented matroids, Adv. in Appl. Math. 32 (2004), 212-238: Proceedings of the Workshop on Tutte polynomials, Barcelona 2001.

[9] E. Gioan, M. Las Vergnas, Active correspondences between bases and regions in supersolvable arrangements, in preparation.

[10] E. Gioan, M. Las Vergnas, (Survey) On a natural correspondence between bases and reorientations, related to the Tutte polynomial and linear programming, in graphs, hyperplane arrangements, and oriented matroids, Proceedings FPSAC03 (Linköping, 2003).

[11] E. Gioan, M. Las Vergnas, The active basis-orientation correspondence, series of papers in preparation.

[12] C. Greene, T. Zaslavsky, On the interpretation of Whitney numbers through arrangements of hyperplanes, zonotopes, non-Radon partitions and orientations of graphs, Trans. Amer. Math. Soc. 280 (1983), 97-126.

[13] B. Lass, Orientations acycliques et le polynôme chromatique, Europ. J. Comb (2001) 22, 1101-1123.

[14] M. Las Vergnas, The Tutte polynomial of a morphism of matroids II. Activities of orientations, in Progress in Graph Theory, J.A. Bondy & U.S.R. Murty eds., Proc. Waterloo Silver Jubilee Combinatorial Conference 1982, Academic Press, Toronto 1984, 367-380.

[15] M. Las Vergnas, A correspondence between spanning trees and orientations in graphs, in Graph Theory and Combinatorics, B. Bollobás ed., Proc. Cambridge Combinatorial Conference in Honour P. Erdös (Cambridge 1983), Academic Press, London 1984, 233-238.

[16] R.P. Stanley, Acyclic orientations of graphs, Discrete Math. 5 (1973), 171-178.

[17] W.T. Tutte, A contribution to the theory of chromatic polynomials, Canadian J. Mathematics 6 (1954), 80-91.

[18] X.G. Viennot, Heaps of pieces, I : Basic definitions and combinatorial lemmas, Combinatoire énumérative, Proc. Colloq., Montral Can., Lect. Notes in Math. 1234, 321-350 (1986).

[19] R.O. Winder, Partitions of N-spaces by hyperplanes, SIAM J. Applied Math. 14 (1966), 811-818.

E-mail address: <Emeric Gioan> gioan@labri.fr
E-mail address: <Michel Las Vergnas> mlv@math.jussieu.fr

Emeric GIOAN: LaBRI, Université Bordeaux I, 351 cours de la Libération, 33405 Talence, France

Michel LAS VERGNAS: Université Pierre et Marie Curie (Paris 6), case 189 - Combinatoire, 4 place Jussieu, 75005 Paris, France